LITHONIA LIGHTING®

Catalog Number	
Notes	
Type	

LED High Bay

COMPACT PRO™

9,000 through 60,000 Lumens

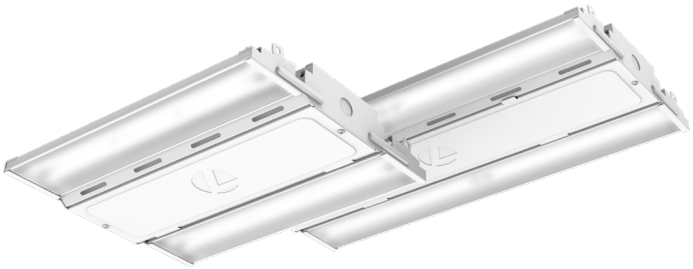

FEATURES & SPECIFICATIONS

INTENDED USE — Ideal one-for-one replacement of conventional lighting systems such as HID and fluorescent. For use in light Industrial applications such as, warehousing and other large indoor spaces with mounting heights ranging from 10' – permitted. **Certain airborne contaminants can diminish integrity of acrylic and LED's. Click here for Acrylic Environmental Compatibility table for suitable uses.**

Certain airborne contaminants, including condensation, may adversely affect the functioning of LEDs and other electronic components, depending on various factors such as concentrations of the contaminants, ventilation, and temperature at the end-user location. Click here for a list of substances that may not be suitable for interaction with LEDs and other electronic components.

CONSTRUCTION — Extruded aluminum channels enable superior thermal performance. Glare Control acrylic lens diffuses light source and reduces glare while protecting LEDs. Lens meets DLC 5.1 standards for UGR (Unified Glare Rating).

ELECTRICAL — 70% lumen maintenance at > 100,000 hours. Thermally protected driver standard with 0-10V dimming. Luminaire surge protection level: designed to withstand up to 6kV/3kA per ANSI C82.77-5-2015 Multi-volt driver, 120-277V standard.

INSTALLATION — Fixture is suitable for mounting by chain, cable, surface-mount bracket, pendant monopoint, or hook monopoint. Utilizing appropriate mounting accessory. Designed for use in ambient temperatures ranging from -40°C to 55°C when suspended 18" off ceiling. Surface mount to 45°C ambient operation.

Note: Temperature cycling, or variations can potentially produce condensation; please consult factory.

LISTINGS — CSA listed. Damp location listed.

DesignLights Consortium® (DLC) Premium qualified product. Not all versions of this product may be DLC Premium qualified. Please check the DLC Qualified Products List at www.designlights.org/QPL to confirm which versions are qualified.

GOVERNMENT PROCUREMENT — BAA – Product with the BAA option qualifies as a domestic end product under the Buy American Act as implemented in the FAR and DFARS. Product with the BAA option also qualifies as manufactured in the United States under DOT Buy America regulations.
BABA – Build America Buy America: Product with the BAA option also qualifies as produced in the United States under the definitions of the Build America, Buy America Act.
Please refer to www.acuitybrands.com/buy-american for additional information.

WARRANTY — 5-year limited warranty. This is the only warranty provided and no other statements in this specification sheet create any warranty of any kind. All other express and implied warranties are disclaimed. Complete warranty terms located at: www.acuitybrands.com/support/warranty/terms-and-conditions

Note: Actual performance may differ as a result of end-user environment and application.
All values are design or typical values, measured under laboratory conditions at 25 °C.
The product images shown are for illustration purposes only and may not be an exact representation of the product.
Specifications subject to change without notice.

Standard Part Number	Stock Part Number	Stock Part Number CI Code	DLC Product ID	DLC Premium?
CPHB 12000LM SEF GCL MD MVOLT GZ10 40K 80CRI DWH	CPHB 12LM MVOLT 40K	*268SAH	PAMXQBT8	Yes
CPHB 12000LM SEF GCL MD MVOLT GZ10 50K 80CRI DWH	CPHB 12LM MVOLT 50K	*2681J0	P0Q23DMQ	Yes
CPHB 15000LM SEF GCL MD MVOLT GZ10 40K 80CRI DWH	CPHB 15LM MVOLT 40K	*2681J2	PLPPHUFG	Yes
CPHB 15000LM SEF GCL MD MVOLT GZ10 50K 80CRI DWH	CPHB 15LM MVOLT 50K	*2681J5	PJ97Z0F9	Yes
CPHB 18000LM SEF GCL MD MVOLT GZ10 40K 80CRI DWH	CPHB 18LM MVOLT 40K	*268SAJ	PWHG1E01	Yes
CPHB 18000LM SEF GCL MD MVOLT GZ10 50K 80CRI DWH	CPHB 18LM MVOLT 50K	*2681J9	PSRNYSS1	Yes
CPHB 24000LM SEF GCL MD MVOLT GZ10 40K 80CRI DWH	CPHB 24LM MVOLT 40K	*2681JE	PC2IBASD	Yes
CPHB 24000LM SEF GCL MD MVOLT GZ10 50K 80CRI DWH	CPHB 24LM MVOLT 50K	*2681JL	P7DUT85I	Yes
CPHB 30000LM SEF GCL MD MVOLT GZ10 40K 80CRI DWH	CPHB 30LM MVOLT 40K	*2681JM	PRXQVN2Q	Yes
CPHB 30000LM SEF GCL MD MVOLT GZ10 50K 80CRI DWH	CPHB 30LM MVOLT 50K	*2681JP	PDAUA08P	Yes

design select

Items marked by a shaded background qualify for the Design Select program and ship in 15 days or less. To learn more about Design Select, visit www.acuitybrands.com/designselect.
*See ordering tree for details

Design Select options indicated by this color background.

Looking for Contractor Select readily available configurations? Click here to visit Contractor Select™ spec sheet or go to www.contractorselect.com

ORDERING INFORMATION

Lead times will vary depending on options selected. Consult with your sales representative.

Example: CPHB 24000LM SEF GCL MD 120 GZ10 40K 80CRI CPSBW LSXR6 HL DWH

CPHB			GCL			GZ10		
Series	**Lumens**	**Performance Package**	**Lens**	**Distribution**	**Voltage**	**Driver**	**Color Temperature**	**Color Rendering Index**
CPHB Compact Pro High Bay	9000LM 9,000 lumens 12000LM 12,000 lumens 15000LM 15,000 lumens 18000LM 18,000 lumens 24000LM 24,000 lumens 30000LM 30,000 lumens 36000LM 36,000 lumens 48000LM 48,000 lumens 60000LM 60,000 lumens	SEF Standard Efficiency HEF High Efficiency	GCL Glare Control Lens	MD Medium Distribution ND Narrow Distribution WD Wide Distribution	MVOLT 120-277V 120 120V 208 208V 240 240V 277 277V 347 347V ‡ 480 480V ‡ HVOLT 347-480V ‡	GZ10 0-10V dimming driver	35K 3500 K 40K 4000 K 50K 5000 K	70CRI 70 CRI 80CRI 80 CRI 90CRI 90 CRI

Options

BAA — Buy America(n) Act and/or Build America Buy America Qualified

Emergency Options: ‡

E10W	IOTA 10W emergency battery pack, Constant Power, Certified in CA Title 20 MAEDBS, Self-diagnostics (LINK) ‡
E10WCP	10W emergency battery pack, Certified in CA Title 20 MAEDBS ‡
E15WMCP	15W emergency battery pack, Certified in CA Title 20 MAEDBS ‡
IE10WMCP	10W emergency battery pack, Certified in CA Title 20 MAEDBS ‡
IE15WMCP	15W emergency battery pack, Certified in CA Title 20 MAEDBS ‡
IE20WCPHE	Iota 20W emergency battery pack, Certified in CA Title 20 MAEDBS ‡
ETS	Generator Transfer Device ‡
WGX	Wireguard installed
IMP	Integrated modular plug ‡
SPD	Additional 10kV surge protection device ‡
RRL_	RELOC®-Ready luminaire. (Not available with Haleon sensor options). See page 13 for ordering information
OCS	RELOC® OnePass selectable cable 6' installed ‡ ‡
OCS4C	RELOC® One Pass® selectable cable 6' installed. ‡ ‡
247OP	24/7 operation, factory installed battery with 3-conductor cordset or Reloc, with on/off controlled by sensor rather than switch, the normal hot and unswitched hot wired together in the fixture. Consult local codes to determine if this is allowable
JP	Job Pack ‡

Cord Sets: ‡

CPSBW	6' white damp location cord with straight blade plug (voltage will match fixture, 120V or 277V only)
CPTLW	6' white damp location cord with 15 amp twist-lock plug (voltage will match fixture) ‡
CPTL20AW	6' white damp location cord with 20 amp twist lock plug (voltage will match fixture) ‡
CNPW	6' white cord, no plug
CNP4CW	6' white cord , 4 conductors (for use with battery)
CNP5CDW	6' white cord, 5 conductors (includes dimming leads)

Individual Controls (LSXR): ‡ ‡

LSXR6	360˚integral high mount motion sensor with standard on/off operation
LSXR6 HL	360˚integral high mount motion sensor with high/low/(off) occupancy operation. For High/Low/(never off)
LSXR6 P	360˚integral high mount motion sensor with on/off switching photocell
LSXR6 ADC	360˚integral high mount motion sensor with dimming & switching photocell
LSXR6 ANL	360˚integral high mount motion sensor with High/Low occupancy dimming & auto-dimming photocell

*For 360˚ integral LOW MOUNT sensors, replace "6" in nomenclature with "10". For High Mount AISLEWAY sensors, replace "6" in nomenclature with "50". Ex: LSXR50 HL

Individual Controls with Bluetooth Programming (Haleon): ‡

HLN45 OCC	360° integral high mount motion sensor; Bluetooth enabled LINK
HLN45 HL	360° integral high mount motion sensor with High/Low (Off) occupancy detection; Bluetooth enabled
HLN45 ADC	360° integral high mount motion sensor. High / Low / Off occupancy operation with photocell; Bluetooth enabled
HLN45 ANL	360° integral high mount motion sensor with High/Low occupancy and auto dimming / off functionality due to photocell; Bluetooth enabled

nLight AIR Wireless Controls:

NLTAIR2 RLSXR6	nLight AIR (wireless) gen 2 control device with high mount occupancy and daylight sensor
NLTAIR2 RPP20 D	nLight AIR (wireless) gen 2 control device (dimming & switching power pack)

*For 360˚ integral LOW MOUNT sensors, replace "6" in nomenclature with "10". For High Mount AISLEWAY sensors, replace "6" in nomenclature with "50". Ex: RLSXR50

NLTAIR2 RMSOD45	Embedded nLight AIR (wireless) gen 2 control device with high mount occupancy and daylight sensor LINK ‡

*For 360° integral Low Mount sensors, replace "45" in nomenclature with "7".

Finish

DWH — Gloss White

© 2020-2025 Acuity Brands Lighting, Inc. All rights reserved.

Accessories: *Order as separate catalog number.*

Mounting:

IBAC120 M100	Aircraft cable 10' with hook (one pair)
IBAC240 M75	Aircraft cable 20' with hook (one pair)
IBHMP	Hook monopoint
CPHBPMPSM	Pendant Monopoint splice box with 3/4" hub (for 9000LM - 18000LM) ‡
CPHBPMPMD	Pendant Monopoint splice box with 3/4" hub (for 24000LM - 30000LM) ‡
CPHBPMPLG	Pendant Monopoint splice box with 3/4" hub (for 36000LM - 60000LM) ‡
ZACVH	Aircraft 10' V hanger (one pair)
HC36	Hanger chain, 36" (one pair)
THUN J2	Tong hanger surface mount bracket ‡

Wire guards:

WGCPHBSM	Wire guard for CPHB (9000LM - 18000LM)
WGCPHBMD	Wire guard for CPHB (24000LM - 30000LM)
WGCPHBLG	Wire guard for CPHB (36000LM - 60000LM)

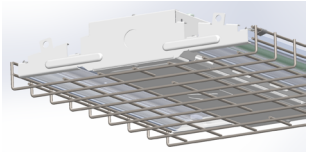

Cord sets for IMP option: ‡

CS1WIMP	Straight plug, 120V
CS3WIMP	Twist-lock, 120V
CS7WIMP	Straight plug, 277V
CS11WIMP	Twist-lock, 277V
CS93WIMP	600V SO white cord, no plug (no voltage required)

‡ Option Value Ordering Restrictions

Option Value	Ordering Restrictions
18000LM	Not available with HVOLT. When 18000LM requires 347 or 480 volt; the fixture utilizes a step-down transformer.
247OP	Requires cord or reloc, battery and sensor options. Not available with 4 conductor cord sets or Individual controls with dimming options. CPHB will be wired from the factory for 24/7 operation (via cord or Reloc), with on/off controlled by sensor rather than switch. Consult local codes to determine if this is allowable.
347	Fixture includes an additional 10kV surge protector. When ordered with 18000LM, includes step down transformer.
480	Fixture includes an additional 10kV surge protector. When ordered with 18000LM, includes step down transformer.
Cord Sets	Must specify voltage on cord sets with plugs.
Cord Sets for IMP	Fixture must be ordered with IMP option. All cord sets are 18/3, 6' white.
CPHBPMPSM/MD/LG	Pendant monopoint splice boxes will require wiring from access plate to splice box KO if power is being dropped through pendant conduit. Fixture does not have a KO in center to pull power out of driver channel through splice box. Not for use with battery pack.
CPTL20AW	Required on 347 and 480 volt.
Emergency Options	May alter fixture construction. Consult line art for dimensions. Batteries not for use with pendant mount option. If cord set is needed, use CNP4CW which will have normal hot and unswitched hot exiting cord set. Not available with IMP, ETS, or THUN options.
E10W	MVOLT only. Available with lumen packages 24000LM - 60000LM.
E10WCP	MVOLT only. Max ambient operating temperature of 35°C. Includes an additional 10kV surge protector on the unswitched, battery hot. Only available with 9000LM - 18000LM.
E15WMCP	MVOLT only. Factory installation only. Not approved for field installation. Max ambient operating temperature of 35°C. Includes an additional 10kV surge protector on the unswitched, battery hot.
ETS	MVOLT only. Not available with cord sets or batteries. When sensor is required, use "ER" sensor option. Utilizes ETS 924 DR component. Includes an additional 10kV surge protector
HVOLT	Fixture includes an additional 10kV surge protector. Not valid with 18000LM. Not available with Haleon sensor options.
IE10WMCP	Available with 347 or 480 only. Not available with 18000LM.
IE15WMCP	Available with 347 or 480 only. Not available with 9000LM, 12000LM, 15000LM, or 18000LM.
IE20WCPHE	MVOLT only. Not available for 9LM, 12LM, 15LM and 18LM. Not available with RPP20 and Cordset together. Not for use with THUN.
IMP	Not available with battery options, NLTAIR2 RPP20 D options, LSXR ER options, ETS, or NLTAIR2 RLSXR ER options. Sensors will be fixture pre-wired to fixture. Not for use with THUN mounting option.
Individual Controls (LSXR)	Comes standard with SPD. LSXR50 not available as a Design Select option when ordered with 70CRI option. This sensor configuration is suitable for minimum ambient temperature of 14°F (-10°C). Not available with other controls.
Individual Controls with Bluetooth Programming (Haleon)	Not available with HVOLT.
JP	Consult table on page 7 for details.
NLTAIR2 RMSOD	When HVOLT, 347, and 480 are ordered fixture utilizes fixture back pack. Not available with battery options when 347, 480 or HVOLT are ordered. Not available with ER when ordered with 9000LM, 12000LM, 15000LM or 18000LM lumen packages (ER option utilizes ETS).
OCS	Must specify voltage. Dry Location listed only.
OCS4C	Dry location listed only. Use when unswitched hot is required for battery pack options.
SPD	10kV surge protector standard with HVOLT, 347, 480, ETS, LSXR, RLSXR, RPP20, and battery options (on the unswitched, battery hot).
THUN J2	Order quantity required in multiples of two. 9000LM - 18000LM requires one per fixture, 24000LM - 60000LM requires two per fixture. Not for use with IMP or battery pack options.
CNP5CDW	When ordered with a battery pack, 247OP is required.

‡ Design Select Ordering Restrictions

Option Value	Ordering Restrictions
CPTLW	Not on program when combined with 208V, 240V, or 347V
Individual Controls (LSXR)	Not on DS program when ordered as LSXR50 with 70CRI.
OCS, OCS4C (all lengths)	Not on program when combined with 120V, 208V, 240V, or 347V

© 2020-2025 Acuity Brands Lighting, Inc. All rights reserved.

CORD SET ORDERING INFORMATION ‡

Cord sets cannot be ordered as accessories

Plug Option		Plug type		Amperage**		Gauge		# of conductors		Color		Location		Length****	
CNP	Cord Only	(blank)	No Plug Option (for Cord Only option)	(blank)	15 amps	(blank)	18 gauge standard	(blank)	3 conductors (blk/wht/grn)	W	White	(blank)	Damp Location	(blank)	6 feet
CP	Cord with Plug	TL	Locking Type	20A	20 amps***			4C	4 conductors; Use with Battery option when unswitched hot is needed					3FT	3 feet
		SB	Straight blade*					5C	5 conductors; Use when fixture has 2 drivers and separate operation is required					10FT	10 feet
								5CD ****	5 conductors; Use with dimming driver when dimming leads are desired (Not for use with dimming sensors)					12FT	12 feet
														15FT	15 feet
														20FT	20 feet

* Straight blade on available with 120, 208, 240, and 277 volt.
** Amperage is only configurable for cords with plugs.
*** 20A required with 347 and 480 volt.
**** Not available with plugs.
***** Available in 1' increments from 1 to 30 feet.

© 2020-2025 Acuity Brands Lighting, Inc. All rights reserved.

PHOTOMETRICS

See www.lithonia.com.

PERFORMANCE TABLE

CPHB SEF	Glare Control Lens, Medium Distribution			
	Lumen Package	Wattage	Lumen Output	LPW
Delivered Lumens 4000K, 80CRI	9000LM	61	9,123	150
	12000LM	87	12,273	141
	15000LM	102	15,343	150
	18000LM	133	18,199	137
	24000LM	174	24,873	143
	30000LM	210	29,825	142
	36000LM	235	36,289	163
	48000LM	324	48,342	153
	60000LM	421	58,946	140
Delivered Lumens 5000K, 80CRI	9000LM	61	9,183	150
	12000LM	88	12,354	140
	15000LM	105	15,444	147
	18000LM	133	18,319	138
	24000LM	174	25,037	144
	30000LM	210	30,081	143
	36000LM	235	36,529	155
	48000LM	324	48,661	150
	60000LM	421	59,452	141

CPHB HEF	Glare Control Lens, Medium Distribution			
	Lumen Package	Wattage	Lumen Output	LPW
Delivered Lumens 4000K, 80CRI	9000LM	55	8,861	161
	12000LM	75	12,056	161
	15000LM	96	14,875	155
	18000LM	127	18,936	149
	24000LM	150	23,740	158
	30000LM	196	29,644	152
	36000LM	210	35,409	169
	48000LM	292	47,480	163
	60000LM	378	59,274	157
Delivered Lumens 5000K, 80CRI	9000LM	55	9,002	164
	12000LM	75	12,248	163
	15000LM	96	15,111	157
	18000LM	127	19,236	151
	24000LM	150	24,117	161
	30000LM	196	30,115	154
	36000LM	210	35,971	171
	48000LM	292	48,234	165
	60000LM	378	60,215	159

*Values shown are at 120V.

SCALING FACTOR TABLES

Multipliers	
ND	1.037
WD	1.004
WGX	0.95

CPHB CHARACTERISTICS

Lumen package	Wattage								Length	Width	Depth	Weight	Comparable light source
	Standard Efficiency (SEF)				High Efficiency (HEF)								
	120V	277V	347V	480V	120V	277V	347V	480V	Dimensions shown in inches (centimeters)			Shown in pounds (kg)	
9000LM	61	60	60	60	55	54	54	54	14.4 (36.6)	11.5 (29.2)	2.3 (5.8)	5 (2.2)	100W MH, 4-lamp T8 NBF
12000LM	88	88	88	87	75	74	74	74	14.4 (36.6)	11.5 (29.2)	2.3 (5.8)	5 (2.2)	175W MH, 4-lamp T8 HBF, 2-lamp T5HO
15000LM	105	104	104	103	96	95	95	94	14.4 (36.6)	11.5 (29.2)	2.3 (5.8)	5 (2.2)	200W MH, 6-lamp T8 NBF
18000LM	133	132	144	144	127	126	138	138	14.4 (36.6)	11.5 (29.2)	2.3 (5.8)	6.5 (2.9)	250W MH, 6-lamp T8 HBF, 4-lamp T5HO
24000LM	174	174	173	173	150	149	149	149	22.8 (57.9)	11.5 (29.2)	2.3 (5.8)	8 (3.6)	400W MH, 6-lamp T5HO
30000LM	210	209	208	208	196	194	194	194	22.8 (57.9)	11.5 (29.2)	2.3 (5.8)	8 (3.6)	575W MH, 10-lamp T8 HBF
36000LM	235	235	234	234	210	208	208	208	44 (111.8)	11.5 (29.2)	2.3 (5.8)	14 (6.35)	750W MH, 8-lamp T5HO
48000LM	324	322	320	320	289	287	286	285	44 (111.8)	11.5 (29.2)	2.3 (5.8)	14 (6.35)	875W MH, 10-lamp T5HO
60000LM	421	421	419	419	374	372	371	370	44 (111.8)	11.5 (29.2)	2.3 (5.8)	14 (6.35)	1000W MH

*Dimensions & weights shown for standard product configurations without optional components

PROJECTED LUMEN MAINTENANCE

Operating hours	10,000	20,000	30,000	40,000	50,000	60,000	70,000	80,000	90,000	100,000
Lumen maintenance factor	0.98	0.96	0.93	0.91	0.89	0.87	0.85	0.83	0.81	0.79

© 2020-2025 Acuity Brands Lighting, Inc. All rights reserved.

BATTERY INFORMATION

EMERGENCY BATTERY PACK OPTIONS

Nomenclature	Part Number	Utilizes BPK option	Field installable (remote mount only)
E10W (MVOLT only)	ILD 10 MVOLT LQD 10-5	Yes	Yes
E10WCP (MVOLT only)	PS1055CP	Yes	Yes
E15WMCP (MVOLT only)	PS1555MCP	Yes	No
IE10WMCP (HVOLT only)	ILBHI CP10 HE SD LCSTICK	Yes	No
IE15WMCP (HVOLT only)	ILBHI CP15 HE SD LCSTICK	Yes	No
IE20WCPHE (MVOLT only)	ILBLP CP20 HE SD	No	Yes

	EMERGENCY LUMENS GCL, MD (5000K, 80CRI)		
	Lumen Package	E10W/ E10WCP	E15WMCP
SEF	9000	1784	2738
	12000	1778	2729
	15000	1734	2701
	18000	1796	2744
	24000	1847	2845
	30000	1884	2868
	36000	1890	2915
	48000	1888	2912
	60000	1872	2853

	EMERGENCY LUMENS GCL, MD (5000K, 80CRI)		
	Lumen Package	E10W/ E10WCP	E15WMCP
HEF	9000	1916	2911
	12000	1914	2909
	15000	1919	2914
	18000	1916	2898
	24000	1966	2984
	30000	1945	2952
	36000	2058	3125
	48000	2057	3124
	60000	2065	3137

Emergency Batteries & Cord Sets - WIRING

When battery is ordered with a **3-conductor cord set and 24/7 operation**

Ideal for use with battery + SENSOR to control fixture on/off based on occupancy. Order option 247OP to receive wired for this scenario. When 247OP is ordered driver black (Hot) and battery red (Hot) will be wired together inside driver channel.

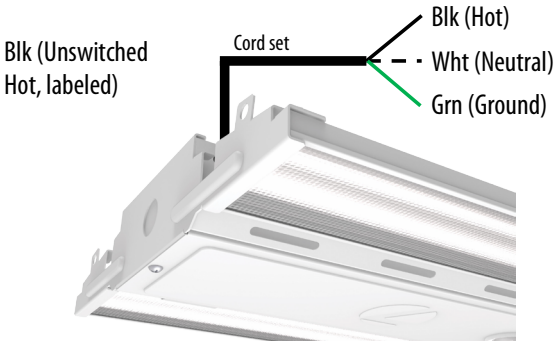

When battery is ordered with a **4-conductor cord set…**

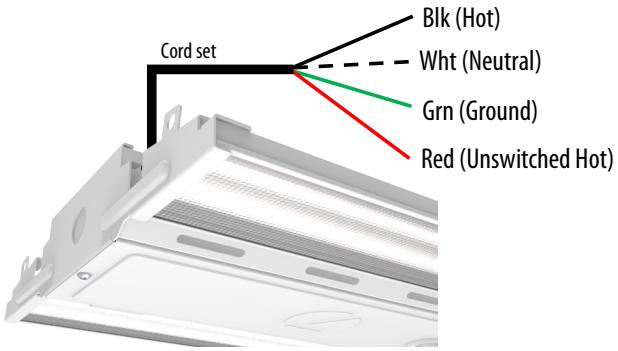

Emergency Batteries & Cord Set Notes

When a battery is ordered with a 3 conductor cord set, 247OP option is required.

- The 3 conductor cord set will include the hot (BLK), neutral (WHT), and ground (GRN) conductors. 24/7 operation means the design intent is for the fixture to always receive power and never be switched off. This ensures the battery is always being charged. When 247OP is ordered with a 3/c cord set, the red battery hot will be wired to the normal hot inside the driver channel, and the new hot wire lead will exit the fixture with the ground and neutral wires. Consult local codes to determine if this is allowable.

When a battery is ordered with a 4 conductor cord set…

- The unswitched hot will be included in the cord set as a separate conductor (RED).

© 2020-2025 Acuity Brands Lighting, Inc. All rights reserved.

MOUNTING ACCESSORIES

ZACVH
(mounts in holes on fixture channel)

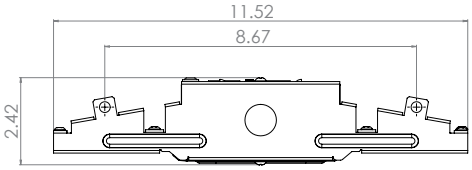

End View: CPHB 9000LM - 60000LM

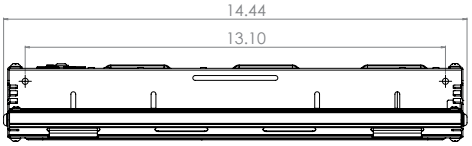

Side View: 9000LM, 12000LM, 15000LM, 18000LM

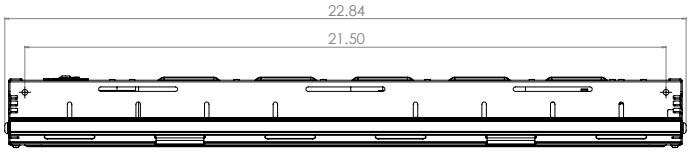

Side View: 24000LM, 30000LM

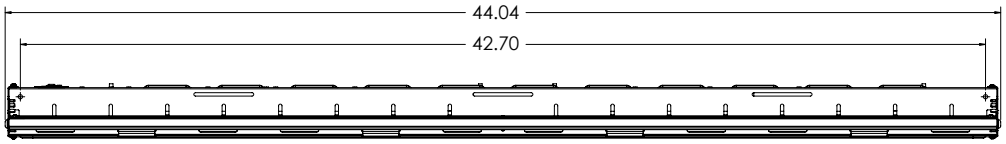

Side View: 36000LM, 48000LM, 60000LM

© 2020-2025 Acuity Brands Lighting, Inc. All rights reserved.

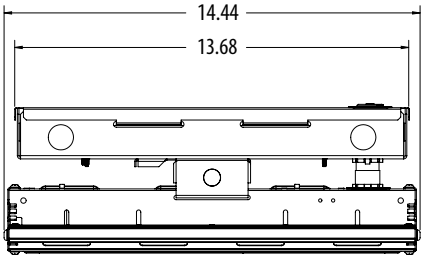

CPHB 9000LM - 18000LM WITH E10WCP/E15WMCP

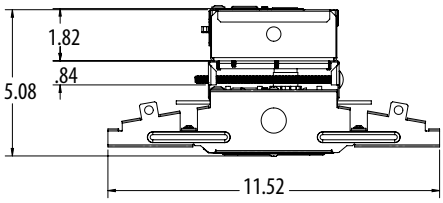

CPHB 9000LM - 60000LM with E10WCP/E15WMCP

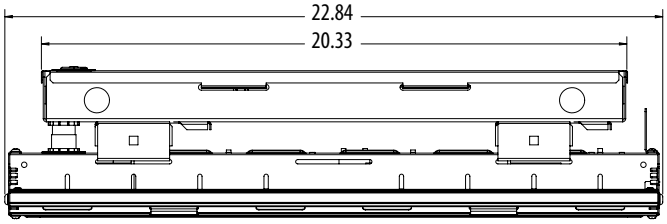

CPHB 24000LM - 30000LM WITH E10WCP/E15WMCP

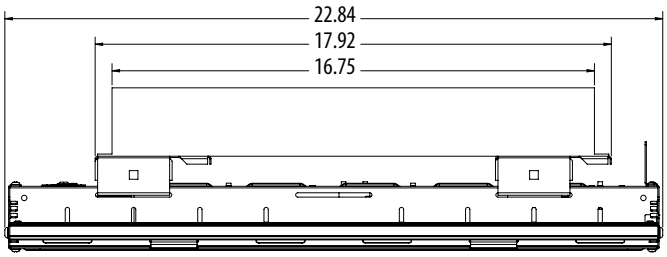

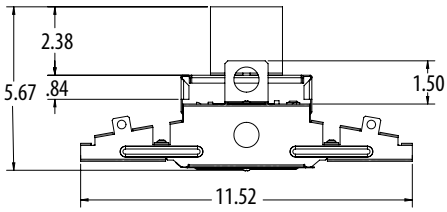

CPHB 24000LM - 30000LM WITH IE20WCPHE

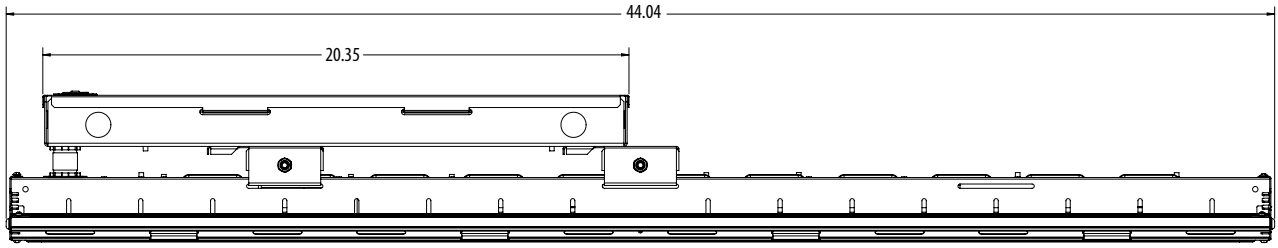

CPHB 36000LM - 60000LM WITH E10WCP/E15WMCP

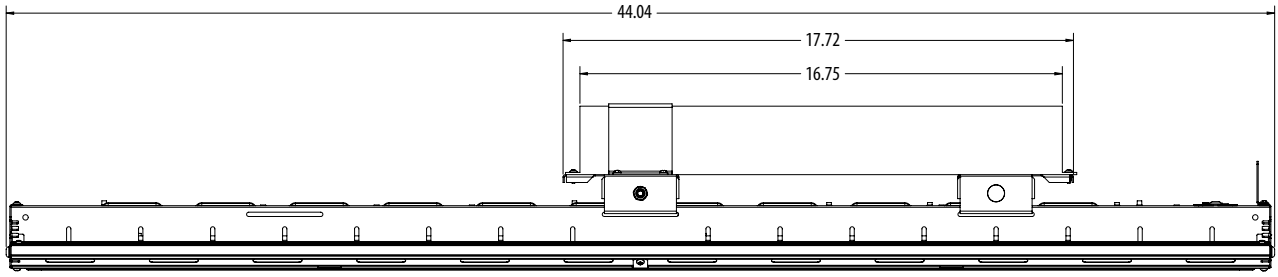

CPHB 36000LM - 60000LM WITH IE20WCPHE

© 2020-2025 Acuity Brands Lighting, Inc. All rights reserved.

JOB PACK DETAILS

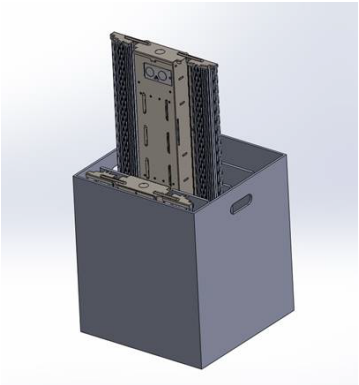
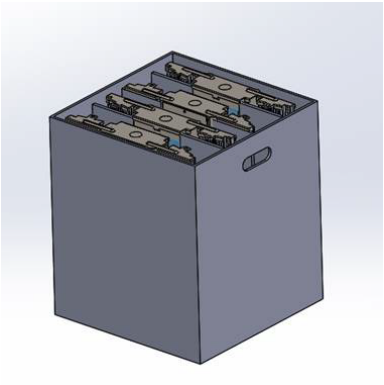
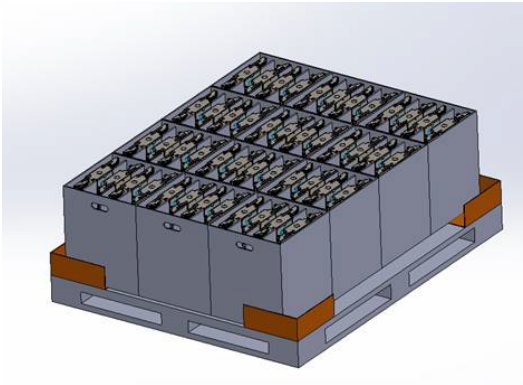
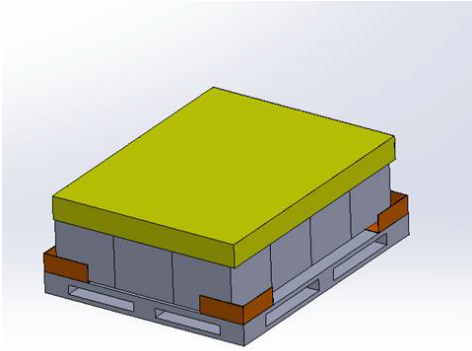
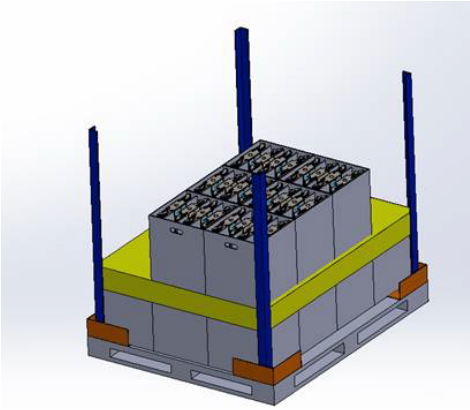
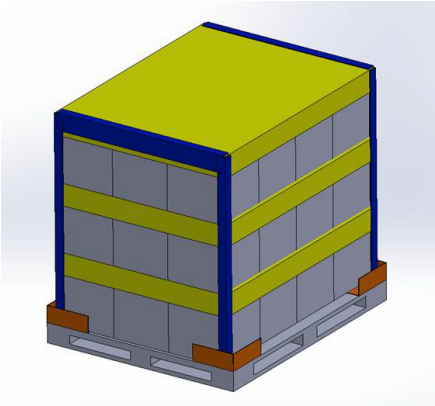

*Representative of Job Pack design for 14" standard units.

Series	Performance	Lumens	Standard Fixture	Cord Set or RELOC® JP	Wireguard JP	Sensor JP
CPHB	SEF/HEF	9000LM	144	144	144	90*
		12000LM				
		15000LM				
		18000LM				
		24000LM	96	96	96	60*
		30000LM				
		36000LM	45*	30*	30*	30*
		48000LM				
		60000LM				

*Traditional Job Pack

Breakout Example:		
Ordered Line:	Qty: 200	CPHB 24000LM SEF GCL MD MVOLT GZ10 40K 80CRI CNPW DWH JP
		*Above configuration shows 96 units for Job Pack
Breakout Line 1:	Qty: 192	CPHB 24000LM SEF GCL MD MVOLT GZ10 40K 80CRI CNPW DWH JP96
		*Will have 2 pallets of 96 units each in job packs
Breakout Line 2:	Qty: 8	CPHB 24000LM SEF GCL MD MVOLT GZ10 40K 80CRI CNPW DWH
		*Balance will ship in unit cartons

Note: If quantity ordered is less than Job Pack quantity for that configuration, the breakout line will default to unit packs.

© 2020-2025 Acuity Brands Lighting, Inc. All rights reserved.

STANDARD SENSOR

		Standard Sensor or Control Device (commonly used with Battery Pack Option)	EM Solution (Used when switching single incoming hot to generator power)	ER Solution (Used when switching to generator power via a 2nd hot lead)
Emergency Operation Scenarios	**Emergency Lighting Strategy**	*Luminaire-integral battery pack and emergency driver *Generator transfer device	*Diesel genset emergency backup supply *Slow transfer inverter (>30ms) emergency backup supply	*Fast Transfer (FT) inverter emergency backup supply *Uninterruptible Power System (UPS) emergency
	Recommended Control Device Option	*Not specifically listed for emergency use. *Wired such that a separately listed emergency device provides emergency lighting power and/or control during loss of normal power scenarios.	*UL 924 listed *EM devices will remain at their high-end trim and ignore wireless lighting control commands, such as in the event of a normal power failure, unless a normal-power-sensed (NPS) broadcast is received at least every 8 seconds. * Using the CLAIRITY+ mobile app, EM devices must be associated with a group that includes a normal power sensing device to receive NPS broadcasts. *Only non-emergency rPP20, rLSXR, rSBOR, rSDGR, and nLight AIR luminaires with version 3.4 or later firmware can provide normal power sensing for EM devices. See specification sheets for control devices and luminaires for more information on options that support normal power sensing.	*UL 924 listed *Utilizes dedicated Normal Power sensing leads to initiate lighting control override during loss of normal power scenarios. *Requires connections to both emergency and normal power circuits.

	Function	Sequence of Operations	Standard Sensor or Control Device	EM Solution (Generator / Inverter powered with 1 hot)	ER Solution (Generator / Inverter on separate emergency circuit - 2 hots)	CPHB Standard Sensor Settings				
						Vacancy Time Out	Dim to Off Time Delay	High Trim	Low Trim	Photocell Set Point
Standalone Sensors (Individual control per fixture)	On/Off	Lights turn on when motion detected; Upon vacancy, Lights turn off after timeout.	**LSXR6**	-	LSXR6 ER	10 min	-	-	-	-
	High/Low (Off)	Lights turn on to high trim when presence is detected; Upon vacancy, the lights dim to low trim after timeout and turn off after "Dim To Off" Time Delay. For High/Low (Never Off) function, bypass the relay by bringing power directly into driver rather than wiring hot through LSXR device.	**LSXR6 HL**	-	LSXR6 HL ER	10 min	2.5 min	100%	10% (Driver Low)"	-
	Photocell	Lights turn on unless ambient light level is above set point; If ambient light levels in the space exceed the photocell set point, lights will turn off even during occupancy.	**LSXR6 P**	-	LSXR6 P ER	-	-	-	-	4 fc
	Dimming + Photocell	Lights turn on when presence is detected unless ambient light level is above set point; Upon vacancy, the lights dim to low trim , then turn off after timeout; During occupancy, automatically raise and lower electric light level to maintain set point and turn off, depending on ambient light.	**LSXR6 ADC**	-	LSXR6 ADC ER	10 min	2.5	-	-	4 fc
	Dimming + Photocell + High/Low	Lights turn on when presence is detected unless ambient light level is above set point; Upon vacancy, lights dim to low trim after timeout and remain at low trim until presence is detected; Automatically raise and lower electric light level to maintain set point during occupancy and during vacancy keeps lights at low trim if ambient light is not sufficient.	**LSXR6 ANL**	-	LSXR6 ANL ER	10 min	-	100%	10%	4 fc
	Note: For 360° integral Low Mount sensors, replace "6" in nomenclature with "10". Ex. LSXR10 P. For High Aisle Mount sensors, replace "6" with "50".									
Bluetooth Sensors (Configurable via mobile Bluetooth app)	On/Off	Lights turn on when motion detected; Upon vacancy, Lights turn off after timeout.	**HLN45 OCC**	-	-	10 min	-	-	-	-
	High/Low (Off)	Lights turn on to high trim when presence is detected; Upon vacancy, the lights dim to low trim after timeout and turn off after "Dim To Off" Time Delay.	**HLN45 HL**	-	-	10 min	2.5 min	100%	10%	-
	Dimming + Photocell	Lights turn on when presence is detected unless ambient light level is above set point; Upon vacancy, the lights dim to low trim during timeout; During occupancy, automatically raise and lower electric light level to maintain set point and turn off, depending on ambient light.	**HLN45 ADC**	-	-	10 min	2.5 min	-	10%	50 fc
	Dimming + Photocell + High/ Low (Never Off)	Lights turn on when presence is detected unless ambient light level is above set point; Upon vacancy, lights dim to low trim after timeout and remain at low trim until presence is detected; Automatically raise and lower electric light level to maintain set point during occupancy and during vacancy keeps lights at low trim if ambient light is not sufficient.	**HLN45 ANL**	-	-	10 min	Never off due to occupancy	100%	10%	50 fc
nLight AIR Wireless Sensors	Dimming + Photocell + Occupancy	Wirelessly programmable network sensor - On/Off control with dimming, occupancy detection, and daylight harvesting (Sensor embedded in fixture)	**NLTAIR2 RMSOD45**	RLSXR 6 EM	NLTAIR2 RMSOD45 ER	7.5 min	-	100%	30%	50 fc
	Dimming	Wirelessly programmable On/Off control with dimming - no sensor (Device embedded in fixture)	**NLTAIR2 RIO**	RPP20D EM	NLTAIR2 RIO ER	-	-	100%	10% (driver low)	-
	Note: For 360° integral Low Mount sensors, replace "45" in nomenclature with "7". EM sensors/controls are KO-mounted; all others integral. RPP20 D EM de-rates fixture to Damp Location.									

***All ER solutions include standard sensor or control device with a factory-installed Iota ETS##-DR (UL924 bypass device). This device is integral to the fixture and will include a hot and neutral lead for the dedicated emergency circuit. MVOLT , 120-277 only. ER solutions are not available with the IMP option.**

© 2020-2025 Acuity Brands Lighting, Inc. All rights reserved.

LSXR – Fixture Mount Occupancy Sensor (see www.AcuityControls.com for additional information)

- Three interchangeable lens options to satisfy multiple mounting heights and coverage pattern requirements.
- Integrated mounting bracket drops lens down 3" from chase nipple.
- Single or dual relay versions — designed with robust protection from the harsh switching requirements of T5 and LED loads.
- Photocell and 0-10VDC dimming options.
- No PIR field calibration or sensitivity adjustments required.
- Sensor ambient temperature rating of 14°F (-10°C) to 131°F (55°C).

LSXR configuration	Comparable CMRB sensor	Old style sensor nomenclature
For shortest lead times use one of the following LSXR configurations		
LSXR50 / LC0ZU	CMRB 50	MSI
LSXR50 HL / LCH0SZU	CMRB 50 D	MSID
LSXR50 P / LCPZU	CMRB 50 P	MSIPED
LSXR6 / LA0ZU	CMRB 6	MSI360
LSXR6 HL / LAH0SZU	CMRB 6 D	MSI360D
LSXR6 P / LAPZU	CMRB 6 P	MSI360PED

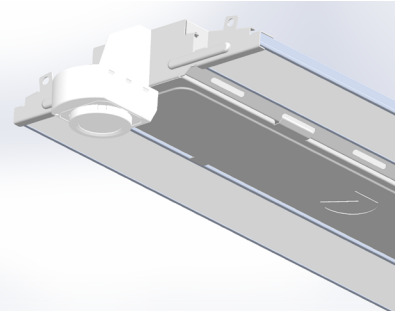

LSXR COVERAGE PATTERNS

HIGH MOUNT 360º LENS (#6)

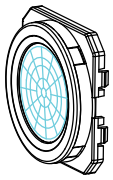

- Best choice for 15 to 45 ft (4.57 to 13.72 m) mounting heights
- 15 to 20 ft (4.57 to 6.10 m) radial coverage overlaps area lit by a typical high bay fixture
- Excellent detection of large motion (e.g. walking) up to a 35 ft (10.76 m) mounting height
- Excellent detection of extra large motion (e.g. forklifts) up to a 45 ft (13.72 m) mounting height

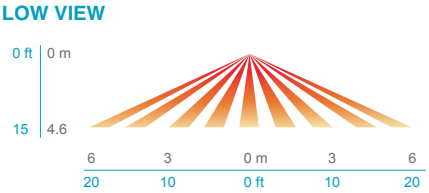

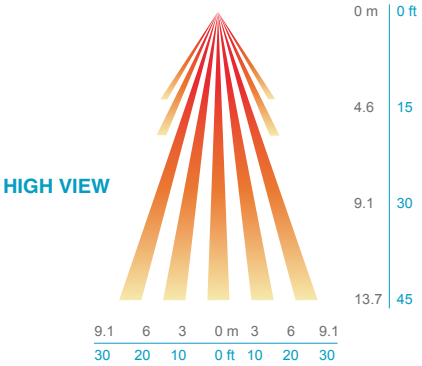

HIGH MOUNT AISLEWAY LENS (#50)

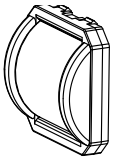

- Provides a bi-directional coverage pattern ideal for warehouse racking
- 1.2x mounting height equals approximate detection range in either direction
- Typical 40 ft (12.19 m) mounting detects 50 ft (15.24 m) in either direction
- Superior aisleway coverage compared to a masked 360º lens

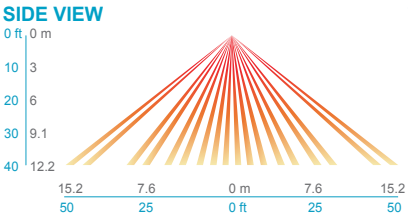

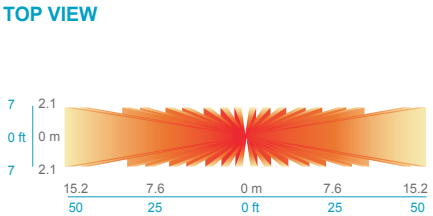

LOW MOUNT 360º LENS (#10)

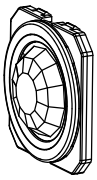

- Best choice for large motion detection (e.g. walking)
- 360º conical shaped pattern
- Provides ~24 ft (7.32 m) radial coverage (~2000 ft2) when mounted at 9 ft (2.74 m)
- 7 to 15 ft (2.13 to 4.57 m) mounting heights provide 16 to 36 ft (4.88 to 10.97 m) radial coverage
- Detection range improves when walking across beams compared to into beams

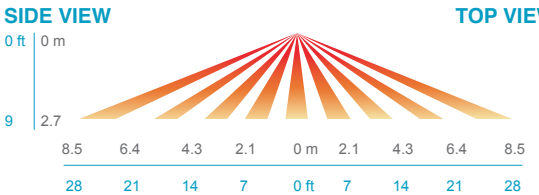

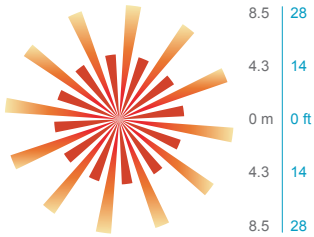

© 2020-2025 Acuity Brands Lighting, Inc. All rights reserved.

HALEON - Integrated Occupancy Sensor with Bluetooth® Programmability

- Programmable sensor settings over Bluetooth® with Acuity VLP smartphone app.
- Default programming options to service various application spaces - occupancy detection, 0-10V dimming and daylight harvesting.
- 360° High Mount and High Mount Aiselway lens detection options for mounting heights up to 40 ft.
- Integrated retractable lens mask included to block unwanted detection.
- Sensor ambient temperature rating of -40°F (-40°C) to 158°F (70°C).

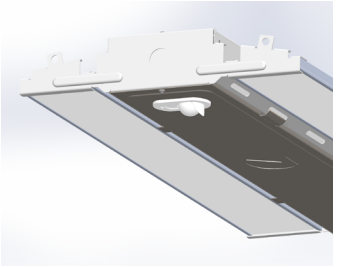

Bluetooth®

Haleon Default Programming

Model	Default Operation	LSXR Equivalent	Occupancy Time Delay	Photocell Mode	Photocell Set-point	Low Trim	High Trim	Dim to Off Time Delay
HLNxxx	On/Off Occupancy Only	LSXR6 LT or LA00STU	10 minutes	Disabled	n/a	n/a	100%	Disabled
HLNxxx HL	Occupancy w/ 0-10V Dimming (High/Low/Off)	LSXR6 HL LT or LAH0STU	10 minutes	Disabled	n/a	10%	100%	2.5 minutes
HLNxxx ADC*	Occupancy w/ Dim & Switch Photocell	LSXR6 ADC LT or LAM0STU	10 minutes	On/Off & Auto Dim	50 fc	10%	100%	2.5 min
HLNxxx ANL	Dim & Switch Photocell with High/Low Occupancy Operation	LSXR6 ANL LT or LAG0STU	10 minutes	On/Off & Auto Dim	50 fc	10%	100%	Stay Dim/ Never off due to occupancy

Note: Lens detection noted in place of 'xxx'
*HLN ADC includes a 2.5 minute dim to off not found in LSXR ADC.

HALEON COVERAGE PATTERNS

45- HIGH MOUNT 360°

- Optimized full coverage pattern for 10 – 50 ft. (3.1 – 12 m)
- Reliable detection of large motion (e.g. pedestrian walking traffic) up to 30 ft. (9.1 m) mounting height
- Reliable detection of extra-large motion (e.g. forklift traffic) up to 40 ft. (12 m) mounting height
- Stow-able rotating lens shield can be utilized to mask areas in which detection is not desired

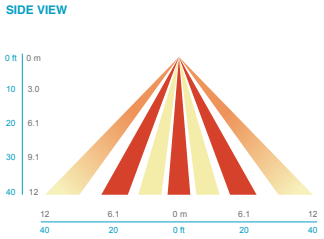

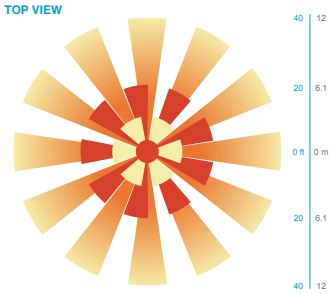

45A HIGH MOUNT AISLEWAY

- Optimized bi directional coverage pattern for aisleways with 10 – 50 ft. (3.1 – 12 m) mounting heights
- 1.2X's mounting height equals approximate detection range
- Reliable detection of large motion (e.g. pedestrian walking traffic) up to 30 ft. (9.1 m) mounting height
- Reliable detection of extra-large motion (e.g. forklift traffic) up to 40 ft. (12 m) mounting height
- Stow-able rotating lens shield can be utilized to mask areas in which detection is not desired

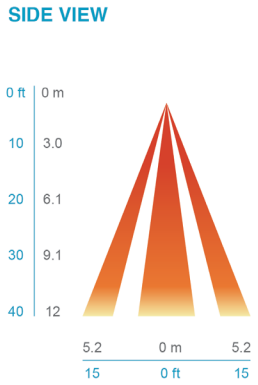

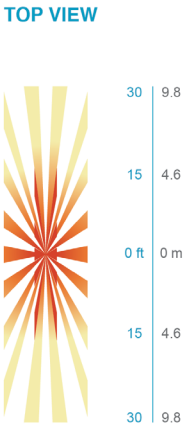

© 2020-2025 Acuity Brands Lighting, Inc. All rights reserved.

nLIGHT AIR CONTROLS - **rLSXR**

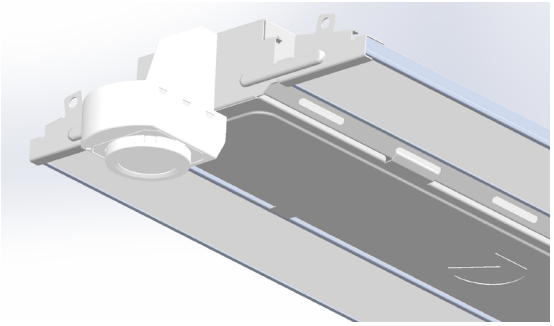

rLSXR COVERAGE PATTERNS

HIGH MOUNT 360º LENS (#6)

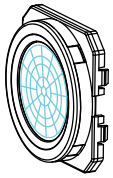

- Best choice for 15 to 45 ft (4.57 to 13.72 m) mounting heights
- 15 to 20 ft (4.57 to 6.10 m) radial coverage overlaps area lit by a typical high bay fixture
- Excellent detection of large motion (e.g. walking) up to a 35 ft (10.76 m) mounting height
- Excellent detection of extra large motion (e.g. forklifts) up to a 45 ft (13.72 m) mounting height

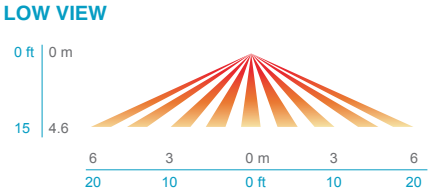

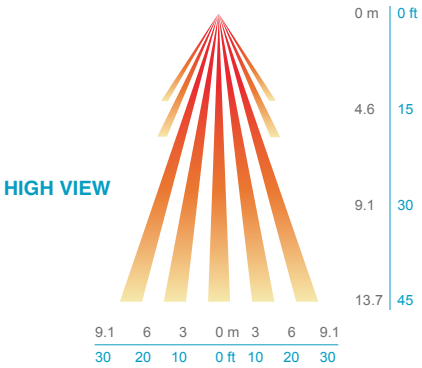

HIGH MOUNT AISLEWAY LENS (#50)

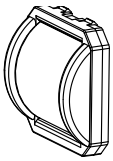

- Provides a bi-directional coverage pattern ideal for warehouse racking
- 1.2x mounting height equals approximate detection range in either direction
- Typical 40 ft (12.19 m) mounting detects 50 ft (15.24 m) in either direction
- Superior aisleway coverage compared to a masked 360º lens

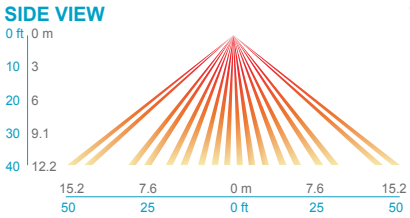

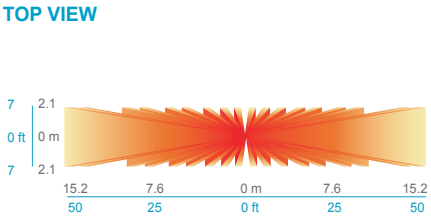

LOW MOUNT 360º LENS (#10)

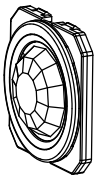

- Best choice for large motion detection (e.g. walking)
- 360º conical shaped pattern
- Provides ~24 ft (7.32 m) radial coverage (~2000 ft2) when mounted at 9 ft (2.74 m)
- 7 to 15 ft (2.13 to 4.57 m) mounting heights provide 16 to 36 ft (4.88 to 10.97 m) radial coverage
- Detection range improves when walking across beams compared to into beams

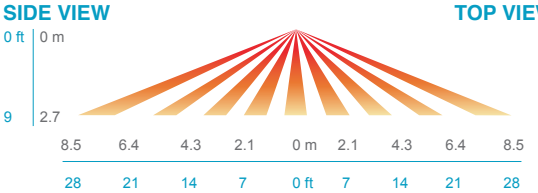

© 2020-2025 Acuity Brands Lighting, Inc. All rights reserved.

RMSOD

- 100% digital PIR detection
- Combined daylight and occupancy sensor
- Fully dimmable via digital or analog dimming protocols, providing the right amount of light for the application and to optimize energy savings
- Optional UL 924 emergency functionality via EM option, which eliminates wiring for sensing normal power

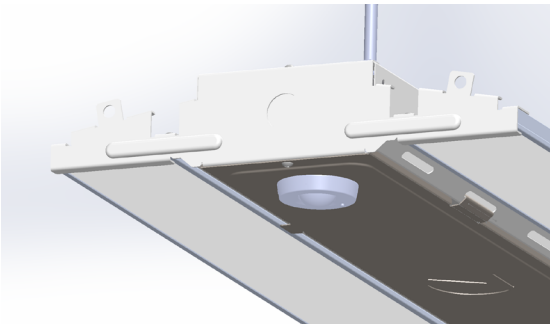

COVERAGE PATTERN

Lens rotates 15 deg to enable adjustment. Initial detection will occur earlier when walking across sensor's field of view than when walking directly at sensor.

SIDE VIEW TOP VIEW

7 - MINI LOW-BAY 360º

- Recommended for walking motion detection from mounting heights between 8 ft (2.44 m) and 20 ft (6.10 m)
- Initial detection of walking motion along sensor axis at distances of 2x the mounting height up to 15 ft (4.57 m)and 1.75x up to 20ft (6.10 m).
- Provides 12 ft (3.66 m) radial detection of small motion when mounted at 9 ft (2.74 m)

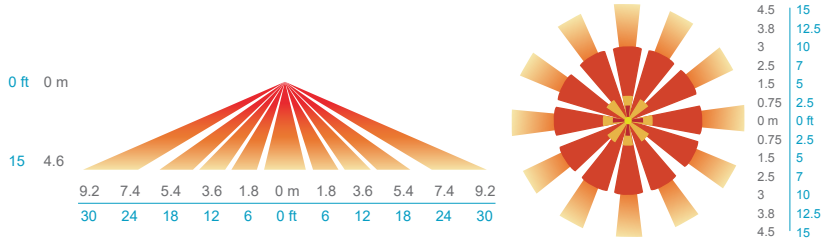

30 - UNIVERSAL 360º

- Provides excellent detection of large motion (e.g. walking) when mounted between 15 to 40 ft (4.57 to 12.19 m)
- 15 to 20 ft (4.57 to 6.10 m) radial coverage overlaps area lit by a typical high bay fixture
- Recommended for fixtures that have a 1:1 spacing to mounting height ratio or less (e.g. fixtures 30' on center or less @ a 30' mounting height).)

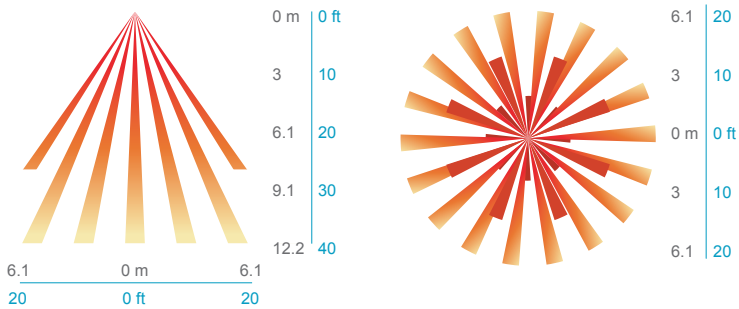

45 - HIGH MOUNT 360º

- Optimized full coverage pattern for 10 – 40 ft. (3.1 – 12 m)
- Reliable detection of large motion (e.g. pedestrian walking traffic) up to 30 ft. (9.1 m) mounting height
- Reliable detection of extra-large motion (e.g. forklift traffic) up to 40 ft. (12 m) mounting height

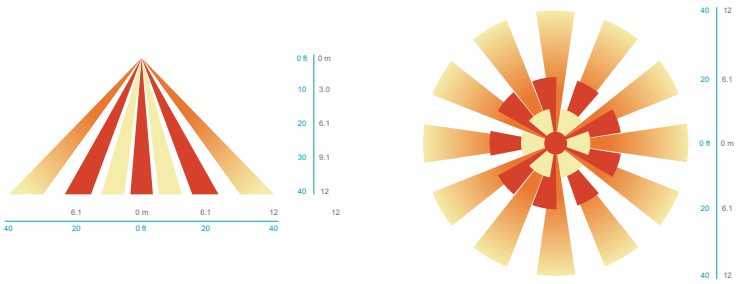

© 2020-2025 Acuity Brands Lighting, Inc. All rights reserved.

IMP - Integrated Modular Plug

- The integrated modular plug (IMP) option allows the installer to plug and play a multitude of accessories.
- Cord sets connect quickly to any fixture with IMP option.
- IMP accessories include occupancy sensors, photocells, X-point relays.

IMP compatible cord sets[1]	
CS1WIMP	Straight plug, 120V
CS3WIMP	Twist-lock, 120V
CS7WIMP	Straight plug, 277V
CS11WIMP	Twist-lock, 277V
CS25WIMP	Twist-lock, 347V
CS93WIMP	600V SEOOW white cord, no plug
CS97WIMP	Twist-lock, 480V

Ordering Example

Order As: Qty 1 - IBG 12000LM SEF AFL GND 120 GZ10 40K 80CRI IMP CP5BW DWH
Ships As: Qty 1 - IBG 12000LM SEF AFL GND MVOLT GZ10 40K 80CRI DWH
Qty 1 - CS1WIMP

Notes

1 Cord set required for fixture operation. All cord sets are 18/3, 6' white.

RRL - RELOC®-Ready Luminaire

- RRL connectors to be used with the OnePass system.
- Load side of connector factory installed to luminaire.
- 4-pole mating connector with push-in terminations allows for simple installation.
- Touch-safe design on both halves meets UL/CSA requirement.
- Wiping contact design allows safe disconnect under load.

ORDERING INFORMATION Lead times will vary depending on options selected. Consult with your sales representative.

Example: RRLA

Series		Wiring instructions	
RRL	RELOC®-ready luminaire	A	Hot conductor wired to position #1 (phase A); non-dimming
		B	Hot conductor wired to position #2 (phase B); non-dimming
		AE	Hot conductor wired to position #1 (phase A), hot conductor #2 wired to position #2 (phase B); non-dimming[1]
		C12S	Hot conductor in position #1 (phase A), low voltage conductor #1 in position #2,low voltage conductor #2 in position #3; dimming[2]

Compatible RELOC® Cables for Industrial Luminaires (ordered and shipped separately)

(click to view RELOC product page for more information)

OCS

OCU

OD

Notes

1 AE commercial fixtures should disconnect the TSPL before unplugging the RRL so it does not go into discharge mode. Requires fixture to have battery option.

2 C12S option is used with the OnePass for 0-10V/DALI applications. Not for use with dimming sensors.

© 2020-2025 Acuity Brands Lighting, Inc. All rights reserved.