

RSXF3 LED
Floodlight

Catalog Number

Notes

Type

Hit the Tab key or mouse over the page to see all interactive elements.

Specifications

EPA (ft²@45°):	3.7 ft² (0.3 m²)
Length:	32.8" (83.3 cm)
Width:	16.1" (40.9 cm)
Height:	3.0" (7.6 cm) Main Body 7.6" (19.3 cm) Arm
Weight (max):	48 lbs (21.8 kg)

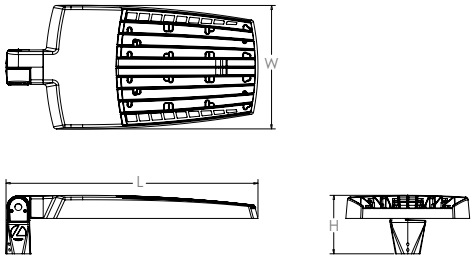

Introduction

The new RSXF LED Flood family delivers maximum value by providing significant energy savings, long life and outstanding photometric performance at an affordable price. The RSXF3 delivers 25,000 to 41,000 lumens allowing it to replace 400W to 1000W HID floodlights.

The RSXF features an adjustable integral slipfitter that allows the luminaire to be mounted on a 2-3/8" OD tenon. Integral cover/wire box serves as an approved splice compartment allowing for fast, easy mounting and wiring without opening the electrical compartment. A yoke and other mounting configurations are available.

Ordering Information

EXAMPLE: RSXF3 LED P4 40K WFL MVOLT IS DDBXD

RSXF3 LED

Series	Performance Package	Color Temperature	Distribution	Voltage	Mounting
RSXF3 LED	P1 P2 P3 P4	30K 3000K 40K 4000K 50K 5000K	AWFD Area Wide Forward WFL Wide Flood MFL Medium Flood NFL Narrow Flood SP Spot NSP Narrow Spot	MVOLT (120V-277V) [1] HVOLT (347V-480V) [2] XVOLT (277V-480V) [4] **(use specific voltage for options as noted)** 120 [3] 277 [3] 208 [3] 347 [3] 240 [3] 480 [3]	IS Adjustable slipfitter (fits 2-3/8" OD tenon) [5] YKC64 Yoke with 16-3 SO cord, 4ft [5] AASP Adjustable tilt arm square pole mounting [5] AARP Adjustable tilt arm round pole mounting [5] AAWB Adjustable tilt arm with wall bracket [5] AAWSC Adjustable tilt arm wall bracket and surface conduit box [5]

Options

Shipped Installed

PE	Photocontrol, button style [6,7]
PER7	Seven-wire twist-lock receptacle only (no controls) [7,8,9]
SF	Single fuse (120, 277, 347) [3]
DF	Double fuse (208, 240, 480) [3]
SPD20KV	20KV Surge pack (10KV standard)
FAO	Field adjustable output [7]
DMG	0-10V dimming extend out back of housing for external control (control ordered separate) [7]

Shipped Installed

***Standalone and Networked Sensors/Controls (factory default settings, see table page 5)**

NLTAIR2 PIRHN	nLight AIR generation 2, with Networked Bi-Level motion/ambient sensor [7,10,11,12]
BAA	Buy America(n) Act Compliant
CCE	Coastal Construction [13]

Shipped Separately (requires some field assembly)

FV	Full Visor (360° around light aperture) [14]
UBV	Upper/bottom visor [14]
BS	Bird spikes [15]

*Note: NLTAIR2 PIRHN with nLight Air can be used as a standalone or networked solution. Sensor coverage pattern is affected when luminaire is tilted.

Finish

DDBXD	Dark Bronze
DBLXD	Black
DNAXD	Natural Aluminum
DWHXD	White
DDBTXD	Textured Dark Bronze
DBLBXD	Textured Black
DNATXD	Textured Natural Aluminum
DWHGXD	Textured White

© 2011-2023 Acuity Brands Lighting, Inc. All rights reserved.

Ordering Information

Accessories

Ordered and shipped separately.

RSXF3FV U	Full visor (specify finish)
RSXF3UBV U	Upper/bottom visor (specify finish)
DLL127F 1.5 JU	Photocell - SSL twist-lock (120-277V) [16]
DLL347F 1.5 CUL JU	Photocell - SSL twist-lock (347V) [16]
DLL480F 1.5 CUL JU	Photocell -SSL twist-lock (480V) [16]
DSHORT SBK U	Shorting cap [16]

NOTES

1 MVOLT driver operates on any line voltage from 120-277V (50/60 Hz).
2 HVOLT driver operates on any line voltage from 347-480V (50/60 Hz).
3 Single fuse (SF) requires 120V, 277V or 347V. Double fuse (DF) requires 208V, 240V or 480V.
4 XVOLT driver operates on any line voltage from 277V-480V (50/60 Hz). XVOLT not available with fusing (SF or DF) and not available with PE.
5 Maximum tilt is 90° above horizontal.
6 Requires MOVLT or 347V.
7 Two or more of the following options cannot be combined including PE, DMG, PER7, FAO and NLTAIR2 PIRHN. (Exception: PE and FAO can be combined; also PE and DMG can be combined.)
8 Compatible with standard twist-lock photocells for dusk to dawn operation or advanced control nodes that provide 0-10V dimming signals. Wire 4/Wire 5 wired to dimming leads on driver. Wire6/Wire7 capped inside luminaire. Twistlock photocell ordered and shipped as a separate line item from Acuity Brands Controls. See accessories. Shorting Cap included.
9 For units with option PER7, the mounting must be restricted to +/- 45° from horizontal aim per ANSI C136.10-2010.
10 Must be ordered with PIRHN.
11 Requires MVOLT or HVOLT.
12 Must be ordered with NLTAIR2. For additional information on PIRHN visit here.
13 CCE option not available with AASP, AARP, AAWB, AAWBSC, UVB, FV and BS.
14 May be ordered as an accessory.
15 Option BS must be ordered with fixture for factory pre-drilling.
16 Requires luminaire to be specified with PER7 option. Ordered and shipped as a separate line item from Acuity Brands Controls.

External Shields



UBV Visor - Top Mounted



UBV Visor - Bottom Mounted



Full Visor - 360°

Pole/Mounting Informatiion

Accessories including bullhorns, cross arms and other adpaters are available on pages X-XX. For the complete line of accessories available, visit the accessories tab at Lithonia's Outdoor Poles and Arms product page. Click here to visit Accessories.

HANDHOLE ORIENTATION

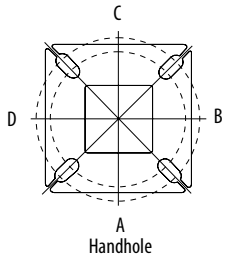

RSX POLE DRILLING

Template #8

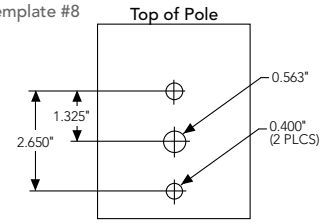

RSXF ADJUSTABLE ARM

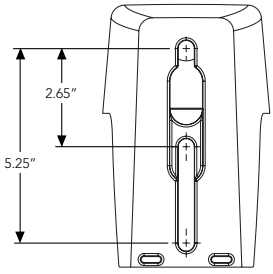

Round Tenon Mount - Pole Top Slipfitters

Tenon O.D.	RSX Mounting	Single	2 @ 180	2 @ 90	3 @ 120	3 @ 90	4 @ 90
2 - 3/8"	AARP	AS3-5 190	AS3-5 280	AS3-5 290	AS3-5 320	AS3-5 390	AS3-5 490
2 - 7/8"	AARP	AST25-190	AST25-280	AST25-290	AST25-320	AST25-390	AST25-490
4"	AARP	AST35-190	AST35-280	AST35-290	AST35-320	AST35-390	AST35-490

Drill Side Location by Configuration Type

Drilling Template	Mounting Option	Single	2 @ 180	2 @ 90	3 @ 120	3 @ 90	4 @ 90
	Head Location	Side B	Side B & D	Side B & C	Round Pole Only	Side B, C & D	Side A, B, C & D
#8	Drill Nomenclature	DM19AS	DM28AS	DM29AS	DM32AS	DM39AS	DM49AS

RSXF3 - Luminaire EPA

*Includes luminaire and integral mounting arm. Other tenons, arms, brackets or other accessories are not included in this EPA data.

Fixture Quantity & Mounting Configuration		EPA (ft^2)								
		Single	2 @ 90	2 @ 180	3 @ 90	3 @ 120	4 @ 90	2 Side by Side	3 Side by Side	4 Side by Side
Mounting Type	Tilt									
IS - Integral Slipfitter YK - Yoke AASP/AARP - Adjustable Arm Square/Round Pole	0°	0.7	1.32	1.37	2	1.76	2.62	1.39	2.09	2.8
	10°	0.96	1.85	1.84	2.76	2.4	3.64	1.92	1.92	3.84
	20°	1.34	2.58	2.64	3.83	3.35	5.11	2.68	2.68	5.36
	30°	2.04	3.52	3.79	5.2	4.7	7.03	4.09	4.09	8.16
	40°	3.12	4.54	5.23	6.6	6.33	9.02	6.23	6.23	12.48
	45°	3.72	5.05	6.12	7.35	7.15	10.01	7.45	7.45	14.88
	50°	4.01	5.49	6.6	7.87	7.81	10.88	8.02	8.02	16.04
	60°	4.72	6.36	7.69	9.09	9.11	12.61	9.44	9.44	18.88
	70°	4.9	7.01	8.05	10.02	9.78	13.94	9.80	9.80	19.6
	80°	4.95	7.4	8.23	10.61	10.26	14.75	9.90	9.90	19.8
	90°	4.91	7.55	8.34	10.88	10.54	15.05	9.82	9.82	19.64

© 2011-2023 Acuity Brands Lighting, Inc. All rights reserved.

Photometric Diagrams

To see complete photometric reports or download .ies files for this product, visit Lithonia Lighting's RSX Flood homepage.

Isofootcandle plots for the RSXF3 LED P4 40K. Distances are in units of mounting height (30').

LEGEND

- 0.1 fc
- 0.5 fc
- 1.0 fc

Luminaires tilted at 45°

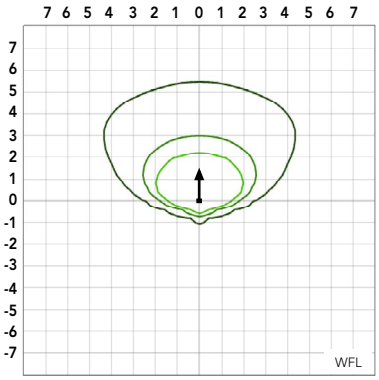

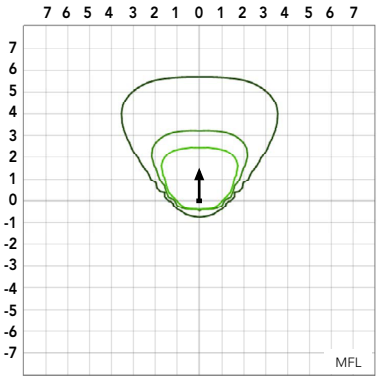

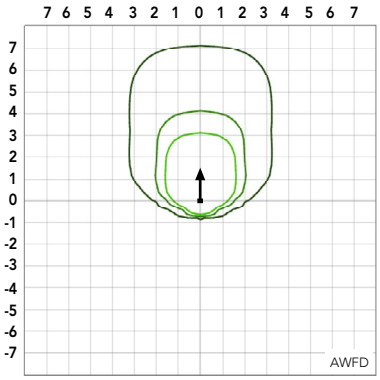

Luminaires tilted at 0°

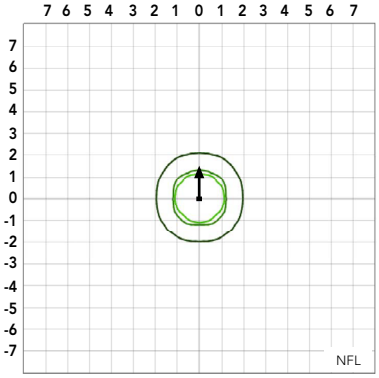

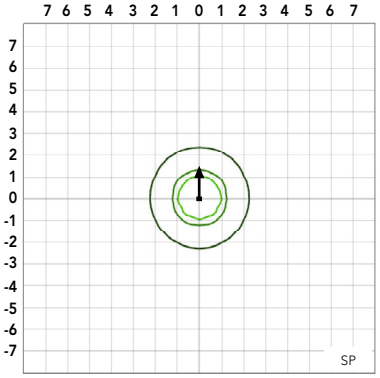

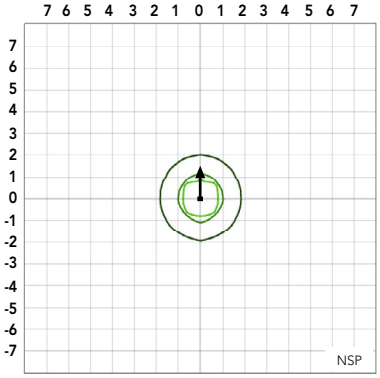

© 2011-2023 Acuity Brands Lighting, Inc. All rights reserved.

Performance Data

Lumen Ambient Temperature (LAT) Multipliers

Use these factors to determine relative lumen output for average ambient temperatures from 0-50°C (32-122°F).

Ambient	Ambient	Lumen Multiplier
0°C	32°F	1.05
5°C	41°F	1.04
10°C	50°F	1.03
15°C	59°F	1.02
20°C	68°F	1.01
25°C	77°F	1.00
30°C	86°F	0.99
35°C	95°F	0.98
40°C	104°F	0.97
45°C	113°F	0.96
50°C	122°F	0.95

Electrical Load

		Current (A)					
Performance Package	System Watts (W)	120V	208V	240V	277V	347V	480V
P1	194W	1.61	0.92	0.80	0.69	0.56	0.40
P2	222W	1.85	1.06	0.92	0.80	0.63	0.45
P3	266W	2.22	1.27	1.10	0.95	0.76	0.55
P4	312W	2.60	1.49	1.29	1.11	0.89	0.64

Projected LED Lumen Maintenance

Operating Hours	50,000	75,000	100,000
Lumen Maintenance Factor	>0.97	>0.95	>0.92

Values calculated according to IESNA TM-21-11 methodology and valid up to 40°C.

Lumen Output

Lumen values are from photometric tests performed in accordance with IESNA LM-79-08. Data is considered to be representative of the configurations shown, within the tolerances allowed by Lighting Facts. Contact factory for performance data on any configurations not shown here.

Performance Package	System Watts	Distribution Type	Field Angle		Beam Angle		30K (3000K, 70 CRI)			40K (4000K, 70 CRI)			50K (5000K, 70 CRI)		
			°H	°V	°H	°V	Lumens	LPW	Max CD	Lumens	LPW	Max CD	Lumens	LPW	Max CD
P1	194W	AWFD	119	120	69	41	24,880	128	20,380	27,336	141	22,392	27,336	141	22,392
		WFL	133	129	116	80	24,376	126	10,378	26,782	138	11,402	26,782	138	11,402
		MFL	105	110	91	96	25,421	131	11,541	27,930	144	12,680	27,930	144	12,680
		NFL	78	79	44	45	24,536	126	36,280	26,957	139	39,860	26,957	139	39,860
		SP	48	48	27	27	23,747	122	75,642	26,091	134	83,109	26,091	134	83,109
		NSP	42	44	19	21	24,165	125	127,593	26,550	137	140,186	26,550	137	140,186
P2	222W	AWFD	119	120	69	41	27,942	126	22,888	30,700	138	25,147	30,700	138	25,147
		WFL	133	129	116	80	27,376	123	11,655	30,078	135	12,806	30,078	135	12,806
		MFL	105	110	91	96	28,549	129	12,961	31,367	141	14,240	31,367	141	14,240
		NFL	78	79	44	45	27,555	124	40,744	30,275	136	44,766	30,275	136	44,766
		SP	48	48	27	27	26,670	120	84,953	29,302	132	93,337	29,302	132	93,337
		NSP	42	44	19	21	27,139	122	143,296	29,817	134	157,436	29,817	134	157,436
P3	266W	AWFD	119	120	69	41	32,398	122	26,538	35,596	134	29,158	35,596	134	29,158
		WFL	133	129	116	80	31,742	119	13,514	34,875	131	14,848	34,875	131	14,848
		MFL	105	110	91	96	33,103	124	15,028	36,369	137	16,511	36,369	137	16,511
		NFL	78	79	44	45	31,950	120	47,243	35,103	132	51,905	35,103	132	51,905
		SP	48	48	27	27	30,923	116	98,500	33,975	128	108,222	33,975	128	108,222
		NSP	42	44	19	21	31,467	118	166,148	34,572	130	182,543	34,572	130	182,543
P4	312W	AWFD	119	120	69	41	36,634	117	30,008	40,249	129	32,969	40,249	129	32,969
		WFL	133	129	116	80	35,892	115	15,281	39,434	126	16,789	39,434	126	16,789
		MFL	105	110	91	96	37,430	120	16,993	41,124	132	18,670	41,124	132	18,670
		NFL	78	79	44	45	36,127	116	53,419	39,692	127	58,691	39,692	127	58,691
		SP	48	48	27	27	34,966	112	111,379	38,416	123	122,368	38,416	123	122,368
		NSP	42	44	19	21	35,581	114	187,870	39,092	125	206,409	39,092	125	206,409

Note: XVOLT configurations only for all RSXF3 LED P4 — Inputs watts is reduced by 9% to 285W. Delivered lumens reduced by 8% for all published values under P4.
IES files for RSXF3 LED P4 with XVOLT are available on Acuitybrands.com.

© 2011-2023 Acuity Brands Lighting, Inc. All rights reserved.

Dimensions

RSXF3 with Adjustable Slipfitter (IS)

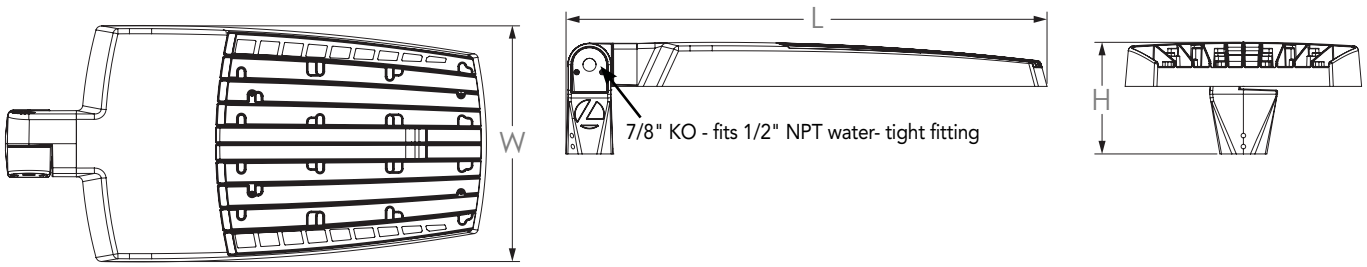

Length: 32.8" (83.3 cm)
Width: 16.1" (40.9 cm)
Height: 3.0" (7.6 cm) Main Body
7.6" (19.3 cm) Arm

RSXF3 with Yoke (YKC64)

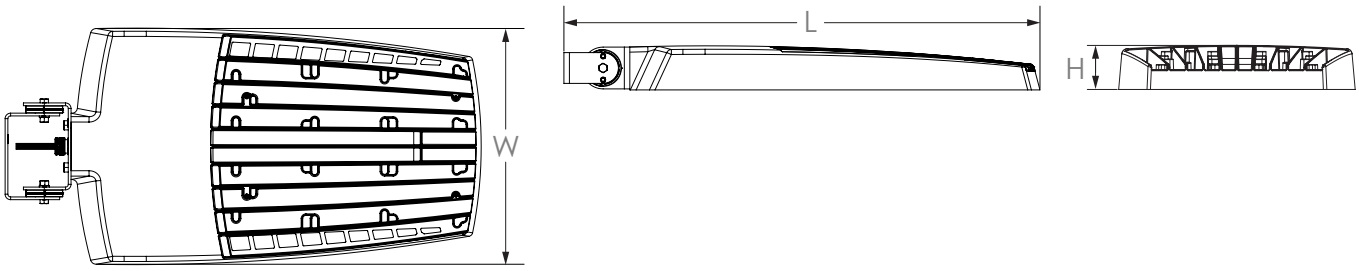

Length: 32.5" (82.6 cm)
Width: 16.1" (40.9 cm)
Height: 3.0" (7.6 cm) Main Body

Yoke (YK) Mounting Detail

Note: Mounting hole pattern is in-line with center of luminaire

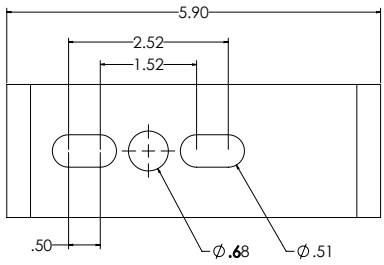

© 2011-2023 Acuity Brands Lighting, Inc. All rights reserved.

Dimensions

RSXF3 with Adjustable Tilt Arm - Square or Round Pole (AASP or AARP)

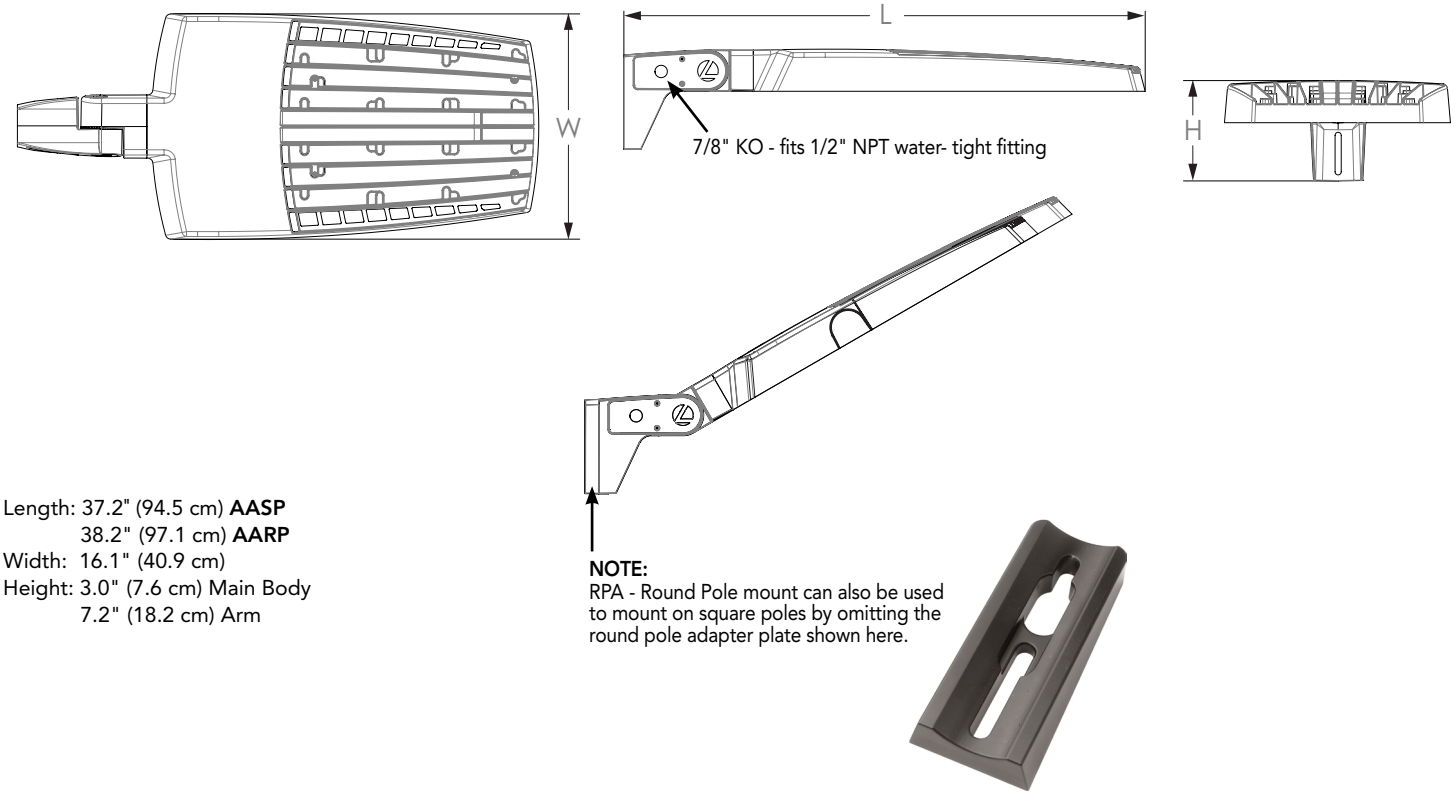

Length: 37.2" (94.5 cm) **AASP**
38.2" (97.1 cm) **AARP**
Width: 16.1" (40.9 cm)
Height: 3.0" (7.6 cm) Main Body
7.2" (18.2 cm) Arm

NOTE:
RPA - Round Pole mount can also be used to mount on square poles by omitting the round pole adapter plate shown here.

Notes

AASP: Requires 3.5" min. square pole for mounting 2, 3, 4 at 90°. Requires 3.0" min. square pole for 1 at 90°.

AARP: Requires 3.2" min. dia. round pole for 2, 3, 4 at 90°. Requires 3.0" min. dia. round pole for mounting 1 at 90°, 2 at 180°, 3 at 120°.

RSXF3 with Adjustable Tilt Arm with Wall Bracket (AAWB)

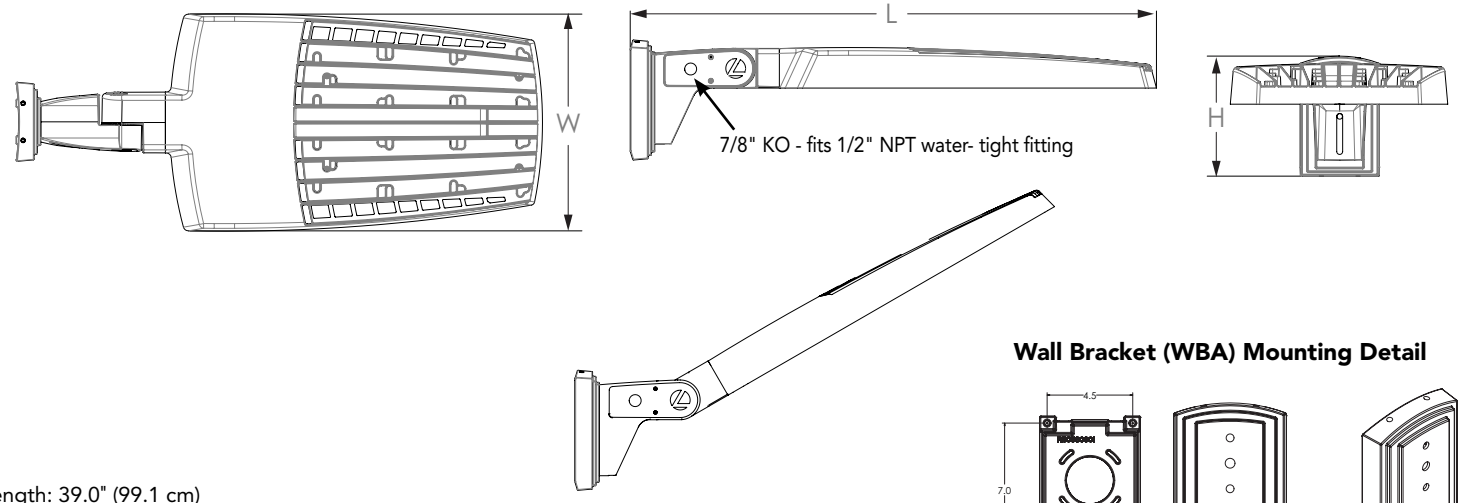

Length: 39.0" (99.1 cm)
Width: 16.1" (40.9 cm)
Height: 3.0" (7.6 cm) Main Body
8.9" (22.6 cm) Arm

Wall Bracket (WBA) Mounting Detail

© 2011-2023 Acuity Brands Lighting, Inc. All rights reserved.

Dimensions

RSXF3 with Adjustable Tilt Arm with Wall Bracket and Surface Conduit Box (AAWSC)

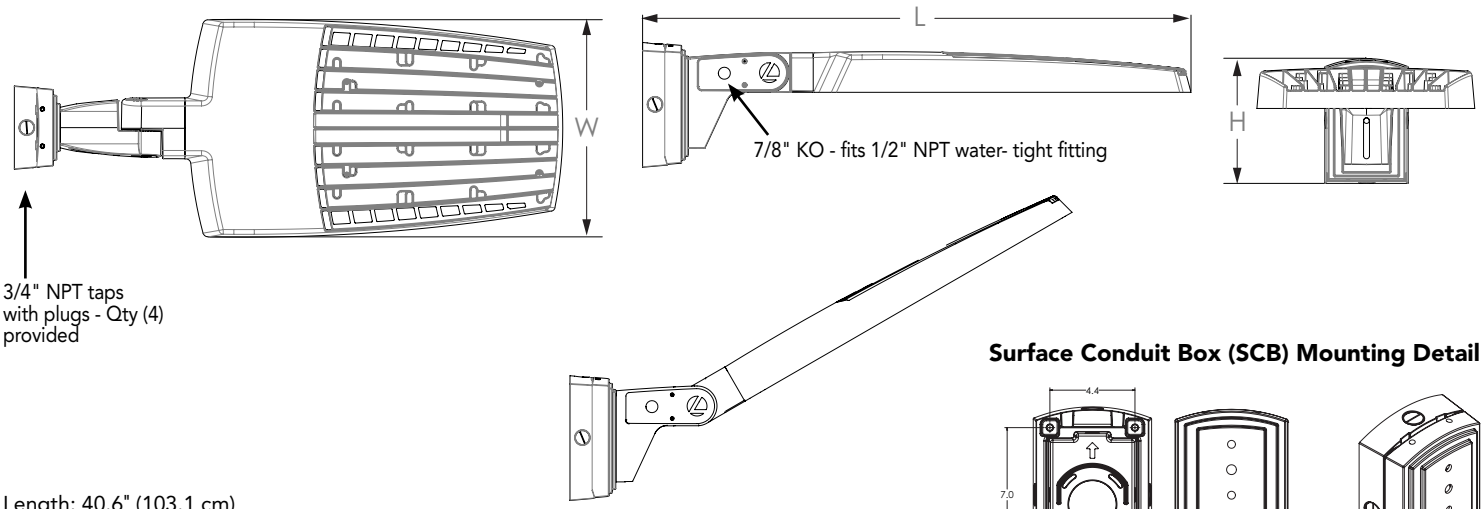

Length: 40.6" (103.1 cm)
Width: 16.1" (40.9 cm)
Height: 3.0" (7.6 cm) Main Body
9.2" (23.4 cm) Arm

Surface Conduit Box (SCB) Mounting Detail

© 2011-2023 Acuity Brands Lighting, Inc. All rights reserved.

nLight Control - Sensor Coverage and Settings

PIRHN nLight Sensor Coverage Pattern

nLight PIRHN

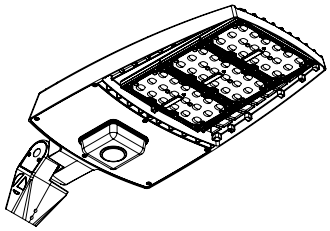

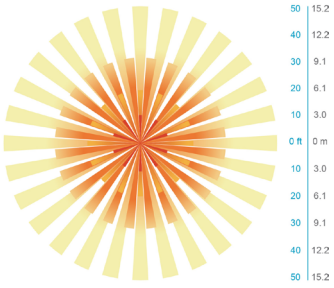

Top

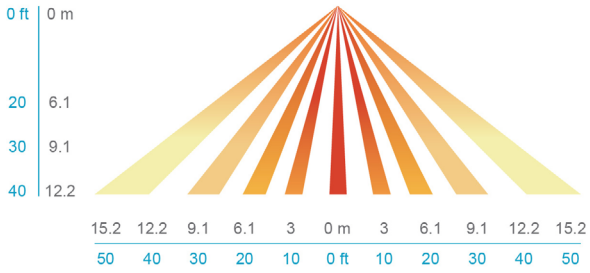

Side

Motion Sensor Default Settings - Option PIRHN						
Option	Dimmed State (unoccupied)	High Level (when occupied)	Photocell Operation	Dwell Time (occupancy time delay)	Ramp-up Time (from unoccupied to occupied)	Ramp-down Time (from occupied to unoccupied)
PIRHN	Approx. 30% Output	100% Output	Enabled @ 1.5FC	7.5 minutes	3 seconds	5 minutes

*Note: PIRHN default settings including photocell set-point, high/low dim rates, and occupancy sensor time delay are all configurable using the Clairity Pro App.

FEATURES & SPECIFICATIONS

INTENDED USE
The RSX LED flood family is designed to provide a long-lasting, energy-efficient solution for the one-for-one replacement of existing metal halide or high pressure sodium lighting. The RSXF3 delivers 25,000 to 41,000 lumens and is ideal for replacing 400W to 100W HID floodlights in parking lots and other area lighting applications.

CONSTRUCTION
The RSX LED flood luminaire features a rugged die-cast aluminum main body that uses heat-dissipating fins and flow-through venting to provide optimal thermal management that both enhances LED performance and extends component life. Integral adjustable slipfitter mounts on a 2 3/8" OD tenon. The adjustable slipfitter has an integral junction box for easy installation. The light engines and housing are sealed against moisture and environmental contaminants to IP66. The low-profile design results in a low EPA, allowing pole optimization. Vibration rated per ANSI 136.31: RSXF and mountings rated for 3G vibration include IS, YK, AASP and AARP. RSXF and mountings rated for 1.5G vibration include AAWB and AAWSC.

FINISH
Exterior parts are protected by a zinc-infused Super Durable TGIC thermoset powder coat finish that provides superior resistance to corrosion and weathering. A tightly controlled multi-stage process ensures superior adhesion as well as a minimum finish thickness of 3 mils. The result is a high-quality finish that is warrantied not to crack or peel.

COASTAL CONSTRUCTION (CCE)
Optional corrosion resistant construction is engineered with added corrosion protection in materials and/or pre-treatment of base material under super durable paint. Provides additional corrosion protection for applications near coastal areas. Finish is salt spray tested to over 5,000 hours per ASTM B117 with scribe rating of 10. Additional lead-times apply.

OPTICS
Precision acrylic refractive lenses are engineered for superior application efficiency, distributing the light to where it is needed most. Available in short and wide pattern distributions including Wide Flood, Medium Flood, Narrow Flood, Spot, Narrow Spot and an Area Wide/Forward distribution pattern featuring a strong forward throw reach that is ideal for lighting large areas from the perimeter.

ELECTRICAL
Light engine(s) configurations consist of high-efficacy LEDs mounted on metal-core circuit boards and aluminum heat sinks to maximize heat dissipation. Light engines are IP66 rated. LED lumen maintenance is >L92/100,000 hours. CCT's of 3000K, 4000K and 5000K (minimum 70 CRI) are available. Fixtures ship standard with 0-10v dimming driver. Class 1 electronic drivers ensure system power factor >90% and THD <20%. Easily serviceable 10kV surge protection device meets a minimum Category C Low operation (per ANSI/IEEE C62.41.2).

STANDARD CONTROLS
The RSX LED flood luminaire has a wide assortment of control options. Dusk to dawn controls include MVOLT and 347V button-type photocells and NEMA twist-lock photocell receptacles.

nLIGHT AIR CONTROLS
The RSXF LED flood luminaire is also available with nLight® AIR which can be used for simple motion occupancy dimming or for the ultimate in wireless control. This powerful controls platform provides out-of-the-box basic motion sensing with photocontrol functionality and is suitable for mounting heights up to 40 feet. No commissioning is required when using factory default settings that provide basic stand-alone motion occupancy dimming that is switched on and off with a built-in photocell. See chart above for motion sensor default out-of-box settings. For more advanced wireless functionality, such as group dimming, nLight AIR can be commissioned using a smartphone and the easy-to-use CLAIRITY app. nLight AIR equipped luminaries can be grouped, resulting in motion sensor and photocell group response without the need for additional equipment. Scheduled dimming with motion sensor over-ride can be achieved when used with the nLight Eclypse. Additional information about nLight Air can be found here.

INSTALLATION
The integral "IS" mount offers an adjustable slipfitter that mounts on a 2 3/8" OD tenon. The adjustable slipfitter has an integral junction box and offers easy installation, wiring and precision distribution pattern aiming. A steel yoke mount is also available and includes a water tight cord grip and cord. Additional mountings are available including an adjustable tilt arm for direct-to-pole and wall and a surface conduit box for wall mount applications. All mountings are adjustable in 5° increments. RSXF flood is not rated for tilting above 90° or mounting within 4 feet of ground. Can be tilted up to 90° above horizontal.

LISTINGS
CSA Certified to meet U.S. and Canadian standards. Suitable for wet locations. Rated for -40°C minimum ambient. DesignLights Consortium® (DLC) Premium qualified product and DLC qualified product. Not all versions of this product may be DLC Premium qualified or DLC qualified. Please check the DLC Qualified Products List at www.designlights.org/QPL to confirm which versions are qualified.
International Dark-Sky Association (IDA) Fixture Seal of Approval (FSA) is available for all products on this page utilizing 3000K color temperature only. U.S Patent No. D882,156S

BUY AMERICAN ACT
Product with the BAA option is assembled in the USA and meets the Buy America(n) government procurement requirements under FAR, DFARS and DOT regulations.
Please refer to www.acuitybrands.com/buy-american for additional information.

WARRANTY
5-year limited warranty. This is the only warranty provided and no other statements in this specification sheet create any warranty of any kind. All other express and implied warranties are disclaimed. Complete warranty terms located at:
www.acuitybrands.com/support/warranty/terms-and-conditions

Note: Actual performance may differ as a result of end-user environment and application.
All values are design or typical values, measured under laboratory conditions at 25 °C.
Specifications subject to change without notice.

© 2011-2023 Acuity Brands Lighting, Inc. All rights reserved.