Catalog Number	
Notes	Type

Petrolux® LED High Bay

Hazardous Location for Demanding Environments

PXHH

Description

- For demanding environments with higher mounting heights where dust, dirt and moisture are a concern.
- **Certain airborne contaminants may adversely affect the functioning of LEDs and other electronic components, depending on various factors such as concentrations of the contaminants, ventilation, and temperature at the end-user location.** Click here for a list of substances that may not be suitable for interaction with LEDs and other electronic components.

Optics

- Prismatic borosilicate glass directs light where needed and reduces harsh glare.
- Silicone rubber lens available that will not brown, chip, shatter or break.
- Six distributions (Type 5 low angle, Type 5 high angle, type 4 forward throw and Type 1 long and narrow) available to maximize versatility.
- Highly engineered LED system ensures superior uniformity and maximizes spacing.
- Lens assembly secured by stainless steel tamper-resistant Torx® T-20 screws.

Electrical

- Luminaire Surge Protection Level: Designed to withstand up to 10kV/5kA per ANSI C82.77-5-2015.
- 0-10V dimming driver is standard. Dims to 10%.
- 3000K, 4000K or 5000K CCT available.
- Fault-tolerant LED light engine continues to provide light even in the failure of one LED.

Mechanical

- Super durable TGIC thermoset powder coat. Corrosion resistant finish is a five-stage pre-treating and painting process that yields over 5,000 hours salt rating per ASTM B117.
- Robust cast aluminum housing with low copper content (0.6% CU content) withstands harsh or hostile environments.
- Universal mount high profile top cover (ceiling/pendant). Optional universal arm available for wall/stanchion. Other mountings include, high profile yoke mount.
- Precise number of fins dissipate maximum amount of heat.
- Universal mount can be wall, stanchion, and angle mounted to accommodate a variety of arms.

Listings

- UL Listed to US and Canadian standards
- Suitable for use in hazardous locations (UL844) Class I, Division 2, Groups A, B, C and D
- Zone Equivalency Markings (see chart on page 7)
- -40°F (-40°C) to 149°F (65°C) ambient rating (see chart on page 3)
- IP65, IP66 and IP67 rated. (see Option Value Ordering Restrictions & Notes on page 3)
- 1G vibration rated.
- Marine rated (see chart on page 7)
- NEMA 4X rated (see chart on page 7)
- IK rated (see chart on page 5)
- DesignLights Consortium® (DLC) Premium qualified product and DLC qualified product. Not all versions of this product may be DLC Premium qualified or DLC qualified. Please check the DLC Qualified Products List at www.designlights.org/QPL to confirm which versions are qualified.

Warranty

5-year limited warranty. This is the only warranty provided and no other statements in this specification sheet create any warranty of any kind. All other express and implied warranties are disclaimed. Complete warranty terms located at: www.acuitybrands.com/support/warranty/terms-and-conditions

Note: Actual performance may differ as a result of end-user environment and application.
All values are design or typical values, measured under laboratory conditions at 25 °C.

Typical Applications

- Petroleum refineries
- Ethanol facilities
- Chemical plants
- Power plants
- Textile mills
- Water and wastewater treatment facilities
- Parking Garages

Dimensions: *Inches (millimeters) unless otherwise noted.*

Universal Mount
Diameter: 13.11 (332.99)
Height: 13.25 (336.55)
Weight: Approx. 36 - 39lbs. (16 -18 kg) models with multiple options and accessories can weigh up to 57lbs.
Pallet quantity: 12 fixtures
EPA: 1.36 sq. ft. wind loading

A+ Capable Luminaire

This item is an A+ capable luminaire, which has been designed and tested to provide consistent color appearance and out-of-the-box control compatibility with simple commissioning.

- All configurations of this luminaire meet the Acuity Brands' specification for chromatic consistency
- This luminaire is part of an A+ Certified solution for nLight® control networks marked by a shaded background*

To learn more about A+, visit www.acuitybrands.com/aplus.

*See ordering tree for details

© 2020-2023 Acuity Brands Lighting, Inc. All rights reserved. Rev. 01/05/23 Specifications subject to change without notice.

A+ Capable options indicated by this color background.

ORDERING INFORMATION

Example: PXHH 18000LM MDU5 MVOLT 30K 80CRI UNM DNXD

Series	Lumens		Distribution		Voltage		Color Temperature		Color Rendering Index		Mounting Options	
PXHH	12000LM	12,000 lumens	FWD	Forward throw, glass lens	MVOLT	Auto Sensing (120-277V, 50/60Hz)	30K	3000K CCT	70CRI	70CRI	UNM	Universal Mount, high profile top cap ‡
	15000LM	15,000 lumens	LND	Long and Narrow, glass lens	120	120V, 50/60Hz	40K	4000K CCT	80CRI	80CRI	PM	Pendant Mount, low profile top cap ‡
	18000LM	18,000 lumens	MD0	Medium with minimal uplight, glass lens	208	208V, 50/60Hz	50K	5000K CCT	90CRI	90CRI	YK90	Yoke Mount 0-90 Degree, high profile top cap
	24000LM	24,000 lumens	MDU5	Medium with uplight, glass lens	240	240V, 50/60Hz						
	28000LM	28,000 lumens	MDU5FR	Medium with uplight, frosted glass lens	277	277V, 50/60Hz						
			WD	Wide, glass lens	HVOLT	Auto Sensing (347-480V, 50/60Hz)						
			WDU	Wide with uplight, glass lens	347	347V, 50/60Hz						
			SO	Medium with minimal uplight, silicone optic	480	480V, 50/60Hz						
			SOLND	Long and Narrow, silicone optic								

Options

Wet Location Cords (no plug): ‡

CNP16WWL3FT	Cord only, 16-gauge, 3 conductors, white, 3ft
CNP164CWL3FT	Cord only, 16-gauge, 4 conductors, black, 3ft‡
CNP164CWWL3FT	Cord only, 16-gauge, 4 conductors, white, 3ft ‡
CNP165CDWL3FT	Cord only, 16-gauge, 5 conductors, includes 0-10V dimming leads, black, 3ft ‡
CNP165CDWWL3FT	Cord only, 16-gauge, 5 conductors, includes 0-10V dimming leads, white, 3ft ‡

Other Options:

BP	Button style photo control, 120V-277V/347V ‡
EMD	Ingress/Egress Marker decal
NSG	Non-silicone gasket (EPDM) ‡
PC	Pendant Cone ‡
UPS	Uplight Shield ‡
WGX	Zinc coated wire guard, factory installed

Bluetooth® Sensors: ‡

SBG6 OCC BTP	360° High Mount sensor, (15-45' mounting heights), on/off occupancy, utilizes smart hub for Bluetooth® programmability (LINK)
SBG6 HL BTP	360° High Mount sensor, (15-45' mounting heights), high/low/(off) occupancy dimming, utilizes smart hub for Bluetooth® programmability (LINK)
SBG6 ADC BTP	360° High Mount sensor, (15-45' mounting heights), on/off occupancy with auto dimming photocell, utilizes smart hub for Bluetooth® programmability (LINK)
SBG6 ANL BTP	360° High Mount Sensor, (15-45' mounting heights), high/low/(off) occupancy dimming with auto dimming photocell, utilizes smart hub for Bluetooth® programmability (LINK)

*For 360° integral Low Mount sensors (8-15' mounting heights), replace "6" in nomenclature with "10". Ex: SBG10 HL BTP

Emergency:

BSL310HAZSB	10.4W Internal hazardous location emergency driver, 0°C min, UL924 Compliant, Certified in CA Title 20 MAEDBS ‡

Mounting Accessories:

072331	Substation arm for a single luminaire, down orientation only ‡
072331CTL	Substation arm for a single luminaire with integral sensor, down orientation only ‡
P3US	Universal arm for wall or stanchion mount ‡
P3US35	35° Universal arm for wall or stanchion mount ‡

Finish

DBXD	Black super durable, corrosion resistant‡
DGXD	Gray super durable, corrosion resistant‡
DWHXD	White super durable, corrosion resistant‡

Accessories: *Order as separate catalog number.*

072331 XX CR	Substation arm for a single luminaire, down orientation only, XX denotes color ‡
072331 CTL XX CR	Substation arm for a single luminaire with sensor, down orientation only ‡
HSCKX	X inch safety chain kit ‡
P3US XX CR	Universal arm for wall or stanchion mount, XX denotes color ‡
P3US35 XX CR	35° Universal arm for wall or stanchion mount, XX denotes color ‡
PCPXHW XX CR	Pendant cone, XX denotes color ‡
UPSPXHW XX CR	Uplight shield, XX denotes color ‡
WGPXHW	Zinc coated wire guard

For Footnotes, see next page.

© 2020-2023 Acuity Brands Lighting, Inc. All rights reserved. Rev. 01/05/23 Specifications subject to change without notice.

‡ Option Value Ordering Restrictions & Notes	
Option value	**Restriction**
072331 CTL, 072331 CTL XX CR	Not available with YK90, cord or cordset. Requires PM or UNM mounting. Includes one 3 conductor input feed cable. **Not IP rated**, suitable for use in wet locations.
072331, 072331 XX CR	Not available with YK90, cord or cordset. Requires PM or UNM mounting. Includes one 5 conductor input feed cable with 0-10V dimming. **Not IP rated**, suitable for use in wet locations.
Bluetooth® Sensors	Not available with BSL310HAZSB battery, CNP165CDWL, CNP165CDWWL cordsets. **IP66 rated**.
BP	Must specify voltage. Not available with MVOLT, HVOLT or 480.
BSL310HAZSB	Utilizes Bodine BSL310HAZSB emergency driver. Available with 12000LM, 15000LM, UNM or YK90 mounting only. Not available with 18000LM, 24000LM, 28000LM, PM pendant mount, HVOLT, 347, 480 or Bluetooth SBG BTP sensors. Only available cord options are CNP164CWL or CNP164CDWWL, but not required.
CNP164CWL, CNP164CWWL	Requires BSL310HAZSB battery option.
CNP165CDWL, CNP165CDWWL	Not available with Bluetooth SBG BTP sensors or BSL310HAZSB battery.
DBXD, DGXD, DWHXD	Corrosion resistant finish is standard.
HSCKX	X denotes length. Available in multiple sizes. Replace X with size in inches. Example: HSCK120 = 120 inches or 10 feet.
NSG	Not available with SO, SOLND distributions, any external sensors or controls.
P3US, P3US XX CR, P3US35, P3US 35 XX CR	Not available with PM, YK90, cord or cordset. Requires UNM mounting. **Not IP rated**, suitable for use in wet locations.
PC, PCPXHW XX CR	Not available with UNM or YK90. Requires PM mounting. Requires minimum 8" customer provided stem.
PM	Not available with BSL310HAZSB battery. Ships with 3/4" NPT pendant opening.
UNM	Includes provisions for 3/4" NPT pendant mount and ceiling mount. When ordered with the P3US universal mounting arm, includes provisions for 1.5" NPT stanchion mount and wall mount.
UPS, UPSPXHW XX CR	When paired with any sensor option, the viewing angle will be cutoff.
Wet Location Cords (no plug)	Available with YK90 mounting only. 6' is standard, but other lengths are available. Must specify length in the nomenclature. Example: CNP16WWL3FT

Ambient Temerature Ratings

Mounting	SBG BTP Sensors	BP Button Photocell	BSL310HAZSB Battery	Voltage	Lumens					Supply Wire
					12000LM	15000LM	18000LM	24000LM	28000LM	
PM UNM YK90	NO	NO	NO	Any	-40°C to 65°C	-40°C to 65°C	-40°C to 65°C	-40°C to 65°C	-40°C to 55°C	90°C
	YES	NO	NO	Any	-40°C to 65°C	-40°C to 65°C	-40°C to 65°C	-40°C to 65°C	-40°C to 55°C	90°C
	YES	NO	YES	120-277V	5°C to 25°C	5°C to 25°C	5°C to 25°C	5°C to 25°C	5°C to 25°C	90°C
	NO	YES	NO	120-347V	-40°C to 50°C	-40°C to 50°C	-40°C to 50°C	-40°C to 50°C	-40°C to 50°C	90°C
	NO	YES	YES	120-277V	5°C to 25°C	5°C to 25°C	5°C to 25°C	5°C to 25°C	5°C to 25°C	90°C
	NO	NO	YES	120-277V	5°C to 25°C	5°C to 25°C	5°C to 25°C	5°C to 25°C	5°C to 25°C	90°C

Emergency Lumen Output

How to Estimate Delivered Lumens in Emergency Mode
Use the formula below to estimate the delivered lumens in emergency mode
Delivered Lumens = P x LPW
P = Output power of emergency driver
LPW = Lumen per watt rating of the luminaire. (See charts on page 6)
The LPW rating is also available at Designlight Consortium

P = 10 watts for BSL310HAZSB

Emergency Lumen Output Example - 10 Watt Battery

Approximate Luminaire Efficacy	Approximate Lumens at 1 Minute	Approximate Lumens at 45 Minutes	Approximate Lumens at 90 Minutes
100 LPW	1000	1000	**1000**
110 LPW	1100	1100	**1100**
120 LPW	1200	1200	**1200**
130 LPW	1300	1300	**1300**
140 LPW	1400	1400	**1400**
150 LPW	1500	1500	**1500**

Number of LED Boards and Drivers Used

Lumen Package	Number of LED boards per fixture	Number of drivers per fixture
12000LM	1	1
15000LM	1	1
18000LM	1	1
24000LM	1	1
28000LM	1	2

© 2020-2023 Acuity Brands Lighting, Inc. All rights reserved. Rev. 01/05/23 Specifications subject to change without notice.

DIMENSIONAL DATA

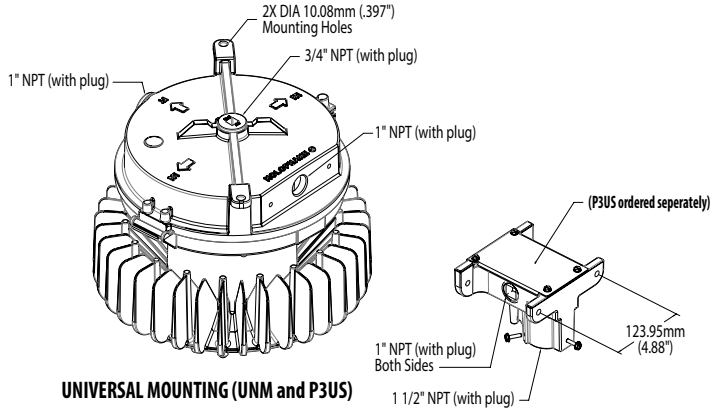

UNIVERSAL MOUNTING (UNM and P3US)

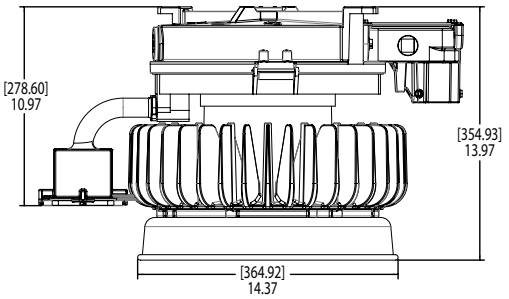

UPLIGHT SHIELD OPTION
(UNM, P3US, SENSOR and UPS)

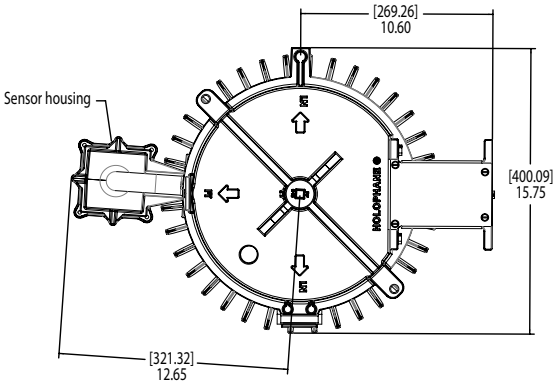

SENSOR OPTION (UNM AND P3US)
(P3US ORDERED SEPERATELY)

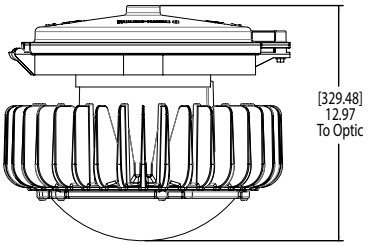

PENDANT MOUNT (PM)

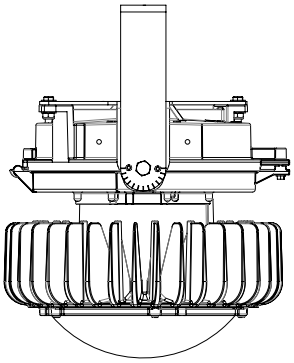

YOKE MOUNT 0-90 DEGREE (YK90)

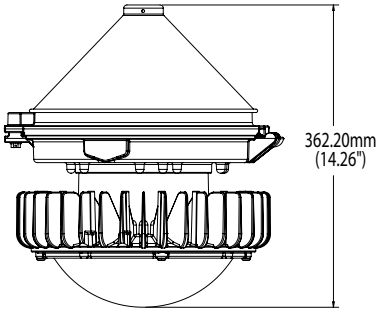

PENDANT CONE OPTION
(PM AND PC)

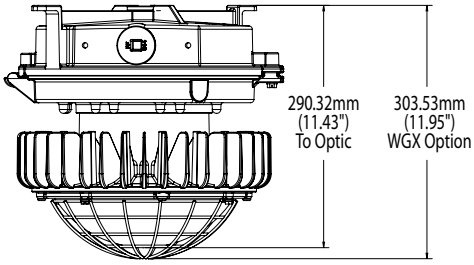

WIRE GUARD OPTION (UNM AND WGX)

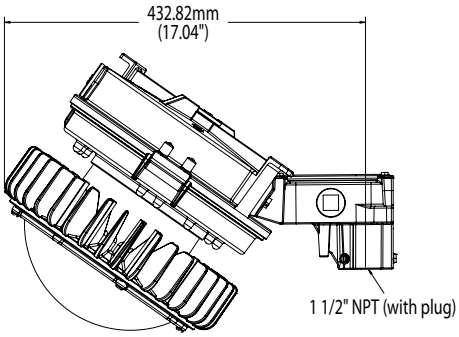

UNIVERSAL MOUNT (UNM and P3US35)
(P3US35 ordered seperately)

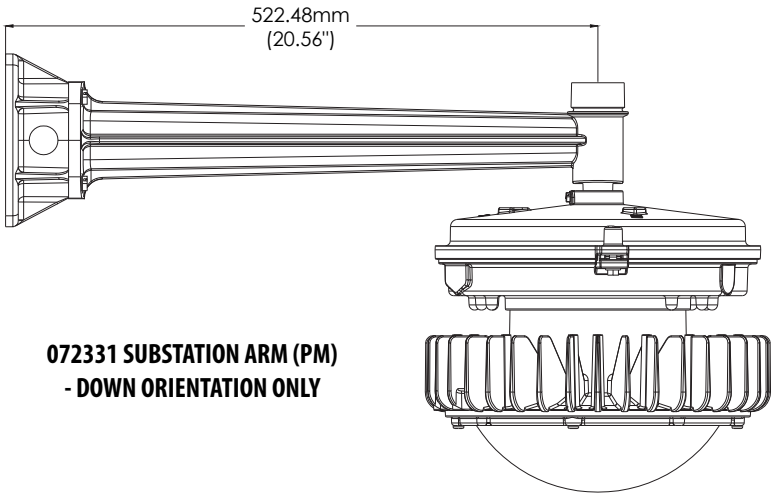

072331 SUBSTATION ARM (PM)
- DOWN ORIENTATION ONLY

© 2020-2023 Acuity Brands Lighting, Inc. All rights reserved. Rev. 01/05/23 Specifications subject to change without notice.

OPERATIONAL DATA

Projected Lumen Maintenance (TM-21)

25°C Ambient						
Lumen Package	0 hours	15000 hours	30000 hours	45000 hours	60000 hours	100000 hours
12000LM	1	0.98	0.96	0.94	0.92	0.87
15000LM	1	0.98	0.96	0.94	0.92	0.87
18000LM	1	0.98	0.96	0.94	0.92	0.87
24000LM	1	0.98	0.96	0.94	0.92	0.87
28000LM	1	0.97	0.95	0.93	0.91	0.85

55°C Ambient						
Lumen Package	0 hours	15000 hours	30000 hours	45000 hours	60000 hours	100000 hours
12000L	1	0.97	0.95	0.92	0.9	0.84
15000L	1	0.97	0.94	0.92	0.89	0.83
18000L	1	0.97	0.94	0.91	0.88	0.81
24000L	1	0.97	0.94	0.91	0.88	0.81
28000L	1	0.96	0.93	0.89	0.86	0.78

Impact Resistance (IK Ratings)

Lens Material	Rating
Glass	IK06
Silicone	IK10

T codes

	40c	50c	60c	65c
12000LM	T4A	T4	T4	T3C
15000LM	T4A	T4A	T4	T4
18000LM	T3C	T3A	T3A	T3
24000LM	T2D	T2C	T2C	T2B
28000LM	T2A	T2	T2	X

BTP Default Settings

Model	Default Operation	Occupancy Time Delay	Photocell Mode	Photocell Set-point	Low Trim	High Trim	Dim to Off Time Delay
SBG6 OCC BTP	On/Off Occupancy Only Disabled	10 minutes	Disabled	n/a	n/a	100%	Disabled
SBG10 OCC BTP	On/Off Occupancy Only Disabled	10 minutes	Disabled	n/a	n/a	100%	Disabled
SBG6 HL BTP	Occupancy w/ 0-10V Dimming (High/Low/Off)	10 minutes	Disabled	n/a	10%	100%	2.5 minutes
SBG10 HL BTP	Occupancy w/ 0-10V Dimming (High/Low/Off)	10 minutes	Disabled	n/a	10%	100%	2.5 minutes
SBG6 ADC BTP	On/Off Occupancy with Auto Dimming Photocell	10 minutes	On/Off & Auto Dim	50 fc	10%	100%	0 seconds
SBG10 ADC BTP	On/Off Occupancy with Auto Dimming Photocell	10 minutes	On/Off & Auto Dim	50 fc	10%	100%	0 seconds
SBG6 ANL BTP	High/Low/(Off) Occupancy Dimming with Auto Dimming Photocell	10 minutes	On/Off & Auto Dim	50 fc	10%	100%	Stay Dim/ Never Off
SBG10 ANL BTP	High/Low/(Off) Occupancy Dimming with Auto Dimming Photocell	10 minutes	On/Off & Auto Dim	50 fc	10%	100%	Stay Dim/ Never Off

© 2020-2023 Acuity Brands Lighting, Inc. All rights reserved. Rev. 01/05/23 Specifications subject to change without notice.

Operating Characteristics

Package	Distribution	Delivered lumens at 3000K CCT 70CRI @ 25C	Delivered lumens at 3000K CCT 80CRI @ 25C	Delivered lumens at 3000K CCT 90CRI @ 25C	Delivered lumens at 4000K CCT 70CRI @ 25C	Delivered lumens at 4000K CCT 80CRI @ 25C	Delivered lumens at 4000K CCT 90CRI @ 25C	Delivered lumens at 5000K CCT 70CRI@ 25C	Delivered lumens at 5000K CCT 80CRI@ 25C	Delivered lumens at 5000K CCT 90CRI @ 25C	Wattage	LPW @ 4000K 80CRI
12000LM	FWD	10678	9957	8319	11595	10613	8581	11595	10678	9040	83	128
	MD	11896	11093	9269	12918	11823	9561	12918	11896	10072	83	142
	MDU5	11582	10800	9024	12577	11511	9308	12577	11582	9805	83	138
	MDU5FR	10207	9518	7953	11083	10144	8203	11083	10207	8641	83	123
	LND	10308	9613	8032	11494	10245	8285	11194	10309	8728	83	123
	WD	11429	10658	8905	12411	11359	9185	12411	11429	9676	83	137
	WDU	11707	10917	9121	12712	11635	9409	12712	11707	9911	83	140
	SO	11719	10929	9131	12726	11648	9419	12726	11719	9922	83	140
	SOLND	10721	9997	8353	11642	10655	10478	11642	10721	9077	83	128
15000LM	FWD	13517	12605	10532	14678	13434	10864	14678	13517	11444	106	127
	MD	15060	14043	11734	16353	14967	12103	16353	15060	12750	106	141
	MDU5	14661	13672	11423	15921	14571	11783	15921	14661	12413	106	138
	MDU5FR	12921	12049	10067	14030	12841	10384	14030	12921	10939	106	121
	LND	13050	12169	10168	14171	12970	10488	14171	13050	11048	106	122
	WD	14468	13492	11273	15711	14379	11628	15711	14468	12249	106	136
	WDU	14820	13820	11547	16093	14729	11910	16093	14920	12547	106	140
	SO	14836	13834	11559	16110	14745	11923	16110	14836	12560	106	139
	SOLND	13571	12656	10574	14737	13488	10907	14737	13571	11490	106	127
18000LM	FWD	15503	14457	12079	16834	15408	12459	16834	15503	13125	119	129
	MD	17272	16106	13457	18755	17166	13881	18755	17272	14623	119	144
	MDU5	16815	15680	13101	18259	16712	13514	18259	16815	14236	119	140
	MDU5FR	14819	13819	11546	16091	14728	11909	16091	14819	12546	119	124
	LND	14967	13957	11661	16252	14875	12028	16252	14967	12671	119	125
	WD	16593	15473	12928	18018	16491	13336	18018	16593	14048	119	139
	WDU	16997	15850	13243	18456	16892	13660	18456	16997	14390	119	142
	SO	17015	15866	13257	18476	16910	13674	18476	17015	14405	119	142
	SOLND	15565	14515	12127	16902	15469	12509	16902	15565	13178	119	130
24000LM	FWD	21115	19690	16451	22928	20985	16969	22928	21115	17876	163	129
	MD	23524	21936	18328	25544	23379	18906	25544	23524	19916	163	143
	MDU5	22902	21356	17844	24869	22761	18406	24869	22902	19389	163	140
	MDU5FR	20183	18821	15725	21916	20059	16220	21916	20183	17087	163	123
	LND	20384	19009	15882	22135	20259	16383	22135	20385	17258	163	124
	WD	22560	21075	17608	24541	22461	18163	24541	22600	19134	163	138
	WDU	23149	21587	18036	25137	23007	18604	25137	23149	19599	163	141
	SO	23174	21610	18056	25164	23032	18624	25164	23174	19649	163	141
	SOLND	21199	19769	16517	23020	21069	17037	23020	21119	17948	163	129
28000LM	FWD	24434	22785	19038	26533	24284	19637	26533	24434	20686	210	116
	MD	27222	25385	21210	29560	27055	21878	29560	27222	23047	210	129
	MDU5	26502	24714	20649	28778	26339	21299	28778	26502	22437	210	125
	MDU5FR	23356	21779	18197	25362	23212	18770	25362	23556	19773	210	111
	LND	23589	21997	18379	25615	23444	18958	25615	23589	19971	210	112
	WD	26153	24388	20377	28399	25992	21018	28399	26153	22141	210	124
	WDU	26788	24980	20872	29089	26624	21529	29089	26788	22680	210	127
	SO	26817	25007	20894	29120	26652	21552	29120	26817	220704	210	127
	SOLND	24532	22876	19114	26639	24381	19716	26639	24532	20769	210	116

© 2020-2023 Acuity Brands Lighting, Inc. All rights reserved. Rev. 01/05/23 Specifications subject to change without notice.

Marine/NEMA4X Compatibility

Option Group	Options	Marine	NEMA4X
Distribution	FWD, MD0, MDU5, MDU5FR, LND, WD, WDU	YES	YES
	SO, SOLND	NO	NO
Mounting	PM, UNM	YES	YES
	YK90	NO	YES
Finish	DBXD	NO	NO
	DGXD, DWHXD	YES	YES
Cordsets	Any Cordset	NO	NO
Bluetooth Sensors	SBG OCC BTP, SBG HL BTP, SBG ADC BTP, SBG ANL BTP	NO	NO
Emergency	BSL310HAZSB	NO	NO
Photocontrols	BP	NO	NO
	EMD	YES	YES
	NSG	NO	NO
	PC, PCPXLW	YES	YES
	UPS, UPSPXLW	YES	YES
	WGX, WGPXLW	YES	YES
Mounting Accessories	072331, 072331CTL	YES	NO
	P3US, P3US35	NO	NO

Zone Equivalency Markings

NEC Protections			
Area	Protection Techniques	Zone Equivalency Markings	
Class I			
Division 2	Hermetically-sealed	CLASS I, DIV 2, GROUP D	CLASS I, ZONE 2 GROUP IIA
	Nonincendive	CLASS I, DIV 2, GROUP C	CLASS I, ZONE 2 GROUP IIB
	Non-sparking	CLASS I, DIV 2, GROUP B	CLASS I, ZONE 1 GROUP IIB PLUS HYDROGEN
	Purged/Pressurized (Type Z)	CLASS I, DIV 2, GROUP A & CLASS I, DIV 2, GROUP B	CLASS I, ZONE 2 GROUP IIC
	Any Class I, Division 1 technique		
	Any Class I, Zone 0, 1, or 2 technique		

Options and Accessories

SBG BTP Sensor and BTP Smarthub Control Module

PM Pendant Mount and WGX Wire Guard

UNM Universal Mount

YK90 Yoke Mount

© 2020-2023 Acuity Brands Lighting, Inc. All rights reserved. Rev. 01/05/23 Specifications subject to change without notice.