Catalog Number	
Notes	Type

Petrolux® LED High Bay

Wet Location for Demanding Environments

PXHW

Description

- For demanding environments with higher mounting heights where dust, dirt and moisture are a concern.
- **Certain airborne contaminants may adversely affect the functioning of LEDs and other electronic components, depending on various factors such as concentrations of the contaminants, ventilation, and temperature at the end-user location.** Click here for a list of substances that may not be suitable for interaction with LEDs and other electronic components.

Optics

- Prismatic borosilicate glass directs light where needed and reduces harsh glare.
- Silicone rubber lens available that will not brown, chip, shatter or break.
- Four distributions (Type 5 low angle, Type 5 high angle, type 4 forward throw and Type 1 long and narrow) available to maximize versatility.
- Highly engineered LED system ensures superior uniformity and maximizes spacing.
- Lens assembly secured by stainless steel tamper-resistant Torx® T-20 screws.

Electrical

- Luminaire Surge Protection Level: Designed to withstand up to 10kV/5kA per ANSI C82.77-5-2015.
- 0-10V dimming driver is standard. Dims to 10%.
- XVOLT is an optional robust driver solution designed to assist with power quality issues and a dropped neutral in 277V input as derived from 480V Wye. Supports 277-480V; 6kV surge rated.
- 3000K, 4000K or 5000K CCT available.
- Fault-tolerant LED light engine continues to provide light even in the failure of one LED.
- Field Adjustable Output (AO) module - Onboard device that adjusts the light output and input wattage to meet site specific requirements. The AO module is preset at the factory to position number 8 (see chart on page 6).

Mechanical

- Super durable TGIC thermoset powder coat finish provides 1500 hours salt fog rating. CR (corrosion resistant) optional finish is a five-stage pre-treating and painting process that yields over 5,000 hours salt rating per ASTM B117.
- Robust cast aluminum housing with low copper content (0.6% CU content) withstands harsh or hostile environments.
- Universal mount high profile top cover (ceiling/pendant). Optional universal arm available for wall/stanchion. Other mountings include, low profile hook/pendant mount and high profile yoke mount.
- Precise number of fins dissipate maximum amount of heat.
- Universal mount can be wall, stanchion, and angle mounted to accommodate a variety of arms.

Listings

- UL listed to US and Canadian standards.
- Suitable for use in wet locations
- -40°F (-40°C) to 149°F (65°C) ambient temperature rating.(see chart on page 8)
- IP65, IP66 and IP67 rated. (see Option Value Ordering Restrictions & Notes on page 3)
- 1G vibration rated.
- Marine rated (see chart on page 8)
- NEMA 4X rated (see chart on page 8)
- NSF Splash Zone 2 and Non-Food Zone rated with FPA option.
- IK rated (see chart on page 6)
- DesignLights Consortium® (DLC) Premium qualified product and DLC qualified product. Not all versions of this product may be DLC Premium qualified or DLC qualified. Please check the DLC Qualified Products List at www.designlights.org/QPL to confirm which versions are qualified.

Warranty

5-year limited warranty. This is the only warranty provided and no other statements in this specification sheet create any warranty of any kind. All other express and implied warranties are disclaimed. Complete warranty terms located at: www.acuitybrands.com/support/warranty/terms-and-conditions

Note: Actual performance may differ as a result of end-user environment and application.
All values are design or typical values, measured under laboratory conditions at 25 °C.

Typical Applications

- Petroleum refineries
- Ethanol facilities
- Chemical plants
- Power plants
- Textile mills
- Water and wastewater treatment facilities
- Parking Garages

Dimensions: *Inches (millimeters) unless otherwise noted.*

Universal Mount

Diameter: 13.11 (332.99)

Height: 13.25 (336.55)

Weight: Approx. 36 - 39lbs. (16 -18 kg) models with multiple options and accessories can weigh up to 57lbs.

Pallet quantity: 12 fixtures

EPA: 1.36 sq. ft. wind loading

A+ Capable Luminaire

This item is an A+ capable luminaire, which has been designed and tested to provide consistent color appearance and out-of-the-box control compatibility with simple commissioning.

- All configurations of this luminaire meet the Acuity Brands' specification for chromatic consistency
- This luminaire is part of an A+ Certified solution for nLight® control networks marked by a shaded background*

To learn more about A+, visit www.acuitybrands.com/aplus.

*See ordering tree for details

© 2018-2023 Acuity Brands Lighting, Inc. All rights reserved. Rev. 04/03/23 Specifications subject to change without notice.

A+ Capable options indicated by this color background.

ORDERING INFORMATION

Example: PXHW 18000LM MDU5 MVOLT 30K 80CRI UNM DNXD

Series	Lumens		Distribution		Voltage				Color Temperature		Color Rendering Index		Mounting Options	
PXHW	12000LM	12,000 lumens	FWD	Forward throw, glass lens	MVOLT	Auto Sensing (120-277V, 50/60Hz)	XVOLT	Enhanced Power Protection (277-480V, 50/60Hz)	30K	3000K CCT	70CRI	70CRI	UNM	Universal Mount, high profile top cap ‡
	15000LM	15,000 lumens	LND	Long and Narrow, glass lens	120	120V, 50/60Hz	277X	277V XVOLT Driver, 50/60Hz	40K	4000K CCT	80CRI	80CRI	PM	Pendant Mount, low profile top cap ‡
	18000LM	18,000 lumens	MDO	Medium glass lens with minimal uplight	208	208V, 50/60Hz	347X	347V XVOLT Driver, 50/60Hz	50K	5000K CCT	90CRI	90CRI	YK90	Yoke Mount 0-90 Degree, high profile top cap
	24000LM	24,000 lumens	MDU5	Medium glass lens with uplight	240	240V, 50/60Hz	480X	480V XVOLT Driver, 50/60Hz						
	28000LM	28,000 lumens	MDU5FR	Medium frosted glass lens with uplight	277	277V, 50/60Hz								
			SO	Medium, silicone optic with minimal uplight	HVOLT	Auto Sensing (347-480V, 50/60Hz)								
			SOLND	Long and Narrow, silicone optic	347	347V, 50/60Hz								
			WD	Wide, glass lens	480	480V, 50/60Hz								
			WDU	Wide, glass lens with uplight										

Options

Damp Location Cord Sets: ‡

CPTL16W	Cord with 15-amp twist locking plug, 16-gauge, 3 conductors, white, 6ft (120, 208, 240, 277 or 277X only)
CPTL20A16W	Cord with 20-amp twist locking plug, 16-gauge, 3 conductors, white, 6ft (347, 347X, 480 or 480X only)
CPSB16W	Cord with 15-amp straight blade plug, 16-gauge, 3 conductors, white, 6ft (120V only)

Wet Location Cord Sets: ‡

CPTL16WWL	6ft cord with 15-amp twist lock plug, 16-gauge, 3 conductors, white (120, 208, 240, 277 or 277X)
CPTL20A16WWL	6ft cord with 20-amp twist lock plug, 16-gauge, 3 conductors, white (347 or 347X only)

Wet Location Cords (no plug): ‡

CNP16WWL	Cord only, 16-gauge, 3 conductors, white, 6ft
CNP164CWL	Cord only, 16-gauge, 4 conductors, black, 6ft ‡
CNP165CDWL	Cord only, 16-gauge, 5 conductors, includes 0-10V dimming leads, black, 6ft ‡
CNP165CDWWL	Cord only, 16-gauge, 5 conductors, includes 0-10V dimming leads, white, 6ft ‡

Hook: ‡

HKMW	3/4" wet listed hook male, PF-291

Individual Non-Dimming Sensors: ‡

SBGR6	360° High Mount sensor, (15-30' mounting heights), on/off occupancy (LINK)
SBGR6 P	360° High Mount Sensor, (15-30' mounting heights), on/off photocell (LINK)

Individual Dimming Sensor: ‡

SBGR6 D 3V	360° High Mount sensor, (15-30' mounting heights), high/low occupancy dimming, (LINK)

*For 360° integral Low Mount sensors (8-15' mounting heights), replace "6" in nomenclature with "10". Ex: SBGR10

Bluetooth® Sensors: ‡

SBG6 OCC BTP	360° High Mount sensor, (15-45' mounting heights), on/off occupancy, utilizes smart hub for Bluetooth® programmability (LINK)
SBG6 HL BTP	360° High Mount sensor, (15-45' mounting heights), high/low/(off) occupancy dimming, utilizes smart hub for Bluetooth® programmability (LINK)
SBG6 ADC BTP	360° High Mount sensor, (15-45' mounting heights), on/off occupancy with auto dimming photocell, utilizes smart hub for Bluetooth® programmability (LINK)
SBG6 ANL BTP	360° High Mount Sensor, (15-45' mounting heights), high/low/(off) occupancy dimming with auto dimming photocell, utilizes smart hub for Bluetooth® programmability (LINK)

*For 360° integral Low Mount sensors (8-15' mounting heights), replace "6" in nomenclature with "10". Ex: SBG10 HL BTP

Photocontrols:

BP	Button style photo control, 120V-277V/347V ‡
PER	NEMA twist-lock receptacle
PCS	DTL solid state photo control, 120-277V ‡
P34	DTL solid state photo control, 347V ‡
P48	DTL solid state photo control, 480V ‡
PSC	Shorting cap ‡

nLight® Wired:

NPP16 D	Power/relay pack, 0-10VDC dimming output (LINK) ‡
NPP16 D ER	Power/relay pack, 0-10VDC dimming output, UL924 Emergency operation (not available with a battery pack) (LINK) ‡

nLight® Air Wireless:

NLTAIR2 RSBG6	nLight® Air Generation 2 enabled, 360° high mount sensor, (15-30' mounting heights), (LINK) ‡

*For 360° integral Low Mount sensors (8-15' mounting heights), replace "6" in nomenclature with "10". For 360° high bay sensors (40' mounting heights), replace "6" in nomenclature with "40". Ex: NLTAIR2 RSBG10

NLTAIR2 RSBOR6	nLight® Air Generation 2 enabled, 360° high mount sensor, (15-30' mounting heights), (LINK) ‡

*For 360° integral Low Mount sensors (8-15' mounting heights), replace "6" in nomenclature with "10". Ex: NLTAIR2 RSBOR10

RPP20 D	nLight® Air Generation 2 enabled, power/relay pack, 0-10V dimming output (LINK) ‡
RPP20 D ER	nLight® Air Generation 2 enabled, power/relay pack, 0-10V dimming output, UL924 EM operation via power sense leads (not available with battery pack) (LINK) ‡
NLTAIR2 RIO	nLight® Air Generation 2 enabled, fixture embedded, 0-10V dimming output (LINK) ‡

Emergency:

E10WMCP	Power Sentry® PS1055MCP, 10 watt internal constant power emergency driver, 5°C min, UL924 Compliant, Certified in CA Title 20 MAEDBS (120-277) (LINK) ‡

Other Options:

AO	Field Adjustable Output, Standard setting is 8 ‡
CR	Corrosion resistant paint
DL	Damp location ‡
EMD	Ingress/Egress Marker Decal
FPA	Food Processing area ‡
NSG	Non silicone gasket (complete fixture) ‡
PC	Pendant cone ‡
UPS	Uplight Shield ‡
WGX	Zinc coated wire guard, factory installed

Mounting Accessories:

072331	Substation arm for a single luminaire, up or down orientation. ‡
072331CTL	Substation arm for a single luminaire with integral sensor, up or down orientation. ‡
072332	Substation arm for two luminaries, up and down orientation. ‡
072332CTL	Substation arm for two luminaires (one with a sensor and one without), up and down orientation. ‡
P3US	Universal arm for wall or stanchion mount ‡
P3US35	35° Universal arm for wall or stanchion mount ‡

Finish

DBXD	Black super durable
DGXD	Gray super durable
DNXD	Satin Nickle super durable
DWHXD	White super durable

NOTE: ‡ indicates option chosen has ordering restrictions. Please reference ordering restrictions chart.

For Accessories and Footnotes, see next page.

© 2018-2023 Acuity Brands Lighting, Inc. All rights reserved. Rev. 04/03/23 Specifications subject to change without notice.

Accessories: *Order as separate catalog number.*	
072331 XX	Substation arm for a single luminaire, up or down orientation. XX denotes color ‡
072331 CTL XX	Substation arm for a single luminaire with sensor, up or down orientation. XX denotes color ‡
072332 XX	Substation arm for two luminaries, up and down orientation. XX denotes color ‡
072332 CTL XX	Substation arm for two luminaires (one with a sensor and one without), up and down orientation. XX denotes color ‡
HSCKX	X inch safety chain kit ‡
MI3502 THREAD SEAL	Thread Sealant ‡
PCPXHW XX	Pendant Cone, XX denotes color ‡
P3US XX	Universal arm for wall or stanchion mount, XX denotes color ‡
P3US35 XX	35° Universal arm for wall or stanchion mount, XX denotes color ‡
UPSPXHW XX	Uplight shield, XX denotes color ‡
WGPXHW	Zinc coated wire guard

‡ Option Value Ordering Restrictions & Notes

Option value	Restriction
072331 CTL, 072331 CTL XX	Not available with YK90, cord or cordset. Requires PM or UNM mounting. Includes one 3 conductor input feed cable. **Not IP rated**, suitable for use in wet locations.
072331, 072331 XX	Not available with YK90, cord or cordset. Requires PM or UNM mounting. Includes one 5 conductor input feed cable with 0-10V dimming. **Not IP rated**, suitable for use in wet locations.
072332 CTL, 072332 CTL XX	Not available with YK90, cord or cordset. Requires PM or UNM mounting. Includes one 3 conductor cable for the sensor to control both luminaires. **Not IP rated**, suitable for use in wet locations.
072332, 072332 XX	Not available with YK90, cord or cordset. Requires PM or UNM mounting. Includes two 5 conductor cables for independent fixture control with 0-10V dimming. **Not IP rated**, suitable for use in wet locations.
A0	Not available with individual dimming SBGR sensors, Bluetooth SBG BTP sensors, nLight air RSBG or RSBOR sensors, nLight air RIO module, nLight air RPP20 power pack, nLight wired NPP16 Power pack, or CNP165CDWL, CNP165CDWWL cordsets.
Bluetooth® Sensors	Not available with A0 adjustable output module, E10WMCP battery, XVOLT, 277X, 347X, 480X, CNP165CDWL, CNP165CDWWL cordsets or any other controls. **IP66 rated**.
BP	Must specify voltage. Not available with MVOLT, HVOLT, 480, XVOLT or 480X.
CNP164CWL	Requires E10WMCP battery option.
CNP165CDWL, CNP165CDWWL	Not available with A0 adjustable output module, individual dimming SBGR sensors, Bluetooth SBG BTP sensors, nLight air RSBG or RSBOR sensors, nLight air RIO module, nLight air RPP20 power packs, nLight wired NPP16 power packs, E10WMCP battery or HKMW hook.
Damp Location Cord Sets	Voltage must be specified. Requires DL and HKMW options. 6' is standard, but other lengths are available. Must specify length in the nomenclature. Example: CPTL16W3FT. NEMA plug configurations: (CPSB) 120 = 5-15P. (CPTL16W) 120 = L5-15P, 208 or 240 = L6-15P, 277 = L7-15P. (CPTL20A16W) 347 = L24-20P, 480 = L8-20P.
DL	Required when damp location options are chosen. Luminaire is wet location listed only when ordered with wet location options. If luminaire is ordered with wet and damp location options, luminaire is damp location listed only and will include a damp label.
E10WMCP	Available with UNM or YK90 only. Not available with PM pendant mount, HVOLT, 347, 480, XVOLT, 277X, 347X, 480X, Bluetooth SBG BTP sensors, nLight air RSBG sensors, nLight air RIO, nLight air RPP20 ER or nLight wired NPP16 ER versions of the power packs. Available with individual dimming and non-dimming SBGR sensors and only available cord option is the CNP164CDWWL cord option, but not required.
FPA	SO or SOLND distribution and DWHXD finish required. Not available with YK90 mounting, E10WMCP battery or any external sensor or control. Not available with FWD, MD0, MDU5, MDU5FR, LND, WD, WDU distributions, DBXD, DGXD, DNXD finishes, SBGR individual dimming and non-dimming sensors, SBG BTP Bluetooth sensors, RSBG and RSBOR nLight air sensors, nLight air RIO, nLight air RPP20 power packs or nLight wired NPP16 power packs.
Hook	Requires Cord or Cordset. Not available with CNP165DCWL, CNP165CDWWL cords. **Not IP rated**, suitable for use in wet locations. When ordered with SBGR, SBG BTP, NLTAIR2 RSBG or RIO, a counter weight will be included for balance.
HSCKX	X denotes length. Available in multiple sizes. Replace X with size in inches. Example: HSCK120 = 120 inches or 10 feet.
Individual Dimming Sensor	Not available with XVOLT, A0 adjustable output module or CNP165CDWL, CNP165CDWWL cordsets. Low mount sensors available, replace 6 with 10 in nomenclature. Example: SBGR10. When ordered with YK90 and mounted between 35-90 degrees DL option is required. **IP66 rated**.
Individual Non-Dimming Sensors	Not available with XVOLT. Low mount sensors available, replace 6 with 10 in nomenclature. Example: SBGR10. When ordered with YK90 and mounted between 35-90 degrees DL option is required. **IP66 rated**.
MI3502 THREAD SEAL	Order one per luminaire, 6ml tube.
NLTAIR2 RIO	Not available with A0 adjustable output, XVOLT, 277X, 347X, 480X voltages, E10WMCP battery or CNP165CDWL, CNP165CDWWL cordsets. **IP66 rated**.
NLTAIR2 RPP20 D	Not available with 347, 480 or HVOLT. DL option required. Normal luminaires (non-emergency) can be used as a normal power sensing device for nearby nLight AIR devices and luminaires with EM emergency options.
NLTAIR2 RPP20 D ER	Not available with 347, 480 or HVOLT. DL option required.
NLTAIR2 RSBG6, NLTAIR2 RSBG10, NLTAIR2 RSBG40	Not available with A0 adjustable output, XVOLT, 277X, 347X, 480X voltages, E10WMCP battery or CNP165CDWL, CNP165CDWWL cordsets. **IP66 rated**.
NLTAIR2 RSBOR6, NLTAIR2 RSBOR10	Not available with A0 adjustable output or CNP165CDWL, CNP165CDWWL cordsets. **IP66 rated**.
NPP16 D	DL required. Not available with MVOLT, HVOLT, XVOLT, 208, 240, 480, 480X voltages, or CNP165CDWL, CNP165CDWWL cordsets.
NPP16 D ER	DL required. Not available with MVOLT, HVOLT, XVOLT, 208, 240, 480, 480X voltages, E10WMCP battery or CNP165CDWL, CNP165CDWWL cordsets.
NSG	Not available with SO, SOLND distribution, any external sensors or controls.
P34	Requires PER option. Available with 347 or 347X voltages.
P3US, P3US XX, P3US35, P3US 35 XX	Not available with PM, YK90, cord or cordset. Requires UNM mounting. Not IP rated, suitable for use in wet locations.
P48	Requires PER option. Available with 480 or 480X voltages.
PC, PCPXHW XX	Not available with UNM or YK90. Requires PM mounting. Requires minimum 8" customer provided stem. Not available with FPA option.
PCS	Requires PER option. Available with MVOLT, 120, 208, 240, 277 or 277X voltages.
PM	Not available with E10WMCP battery. Ships with 3/4" NPT pendant opening.
PSC	Requires PER option.
UNM	Includes provisions for 3/4" NPT pendant mount and ceiling mount. When ordered with the P3US universal mounting arm, includes provisions for 1.5" NPT stanchion mount and wall mount.
UPS, UPSPXHW XX	Not available with FPA option. When paired with any sensor option, the viewing angle will be cutoff.
Wet Location Cord Sets	Voltage must be specified. Requires HKMW option. 6' is standard, but other lengths are available. Must specify length in the nomenclature. Example: CPTL20A16WWL10FT. NEMA plug configurations: (CPTL16WWL) 120 = L5-15P, 208 or 240 = L6-15P, 277 = L7-15P. (CPTL20A16WWL) 347 = L24-20P.
Wet Location Cords (no plug)	6' is standard, but other lengths are available. Must specify length in the nomenclature. Example: CNP16WWL3FT

© 2018-2023 Acuity Brands Lighting, Inc. All rights reserved. Rev. 04/03/23 Specifications subject to change without notice.

DIMENSIONAL DATA

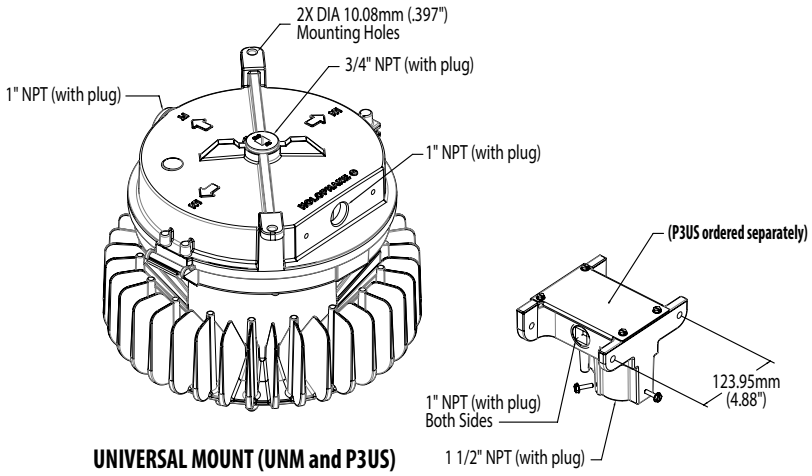

UNIVERSAL MOUNT (UNM and P3US)

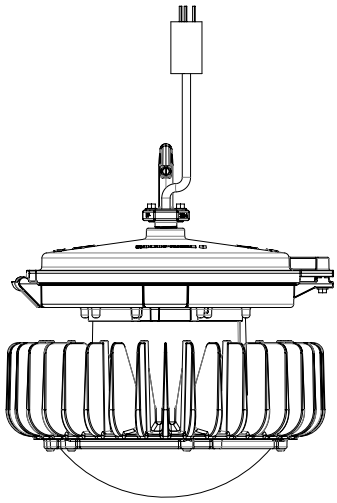

HOOK MOUNT (PM and HKMW)

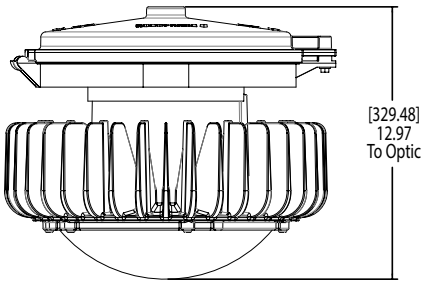

PENDANT MOUNT (PM)

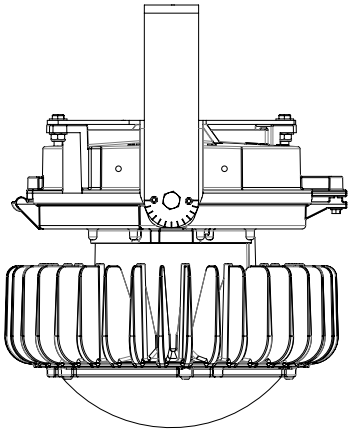

YOKE MOUNT 0-90° (YK90)

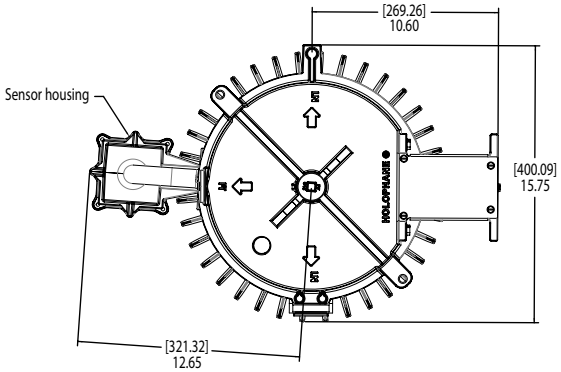

SENSOR OPTION (UNM AND P3US)
(P3US ORDERED SEPARATELY)

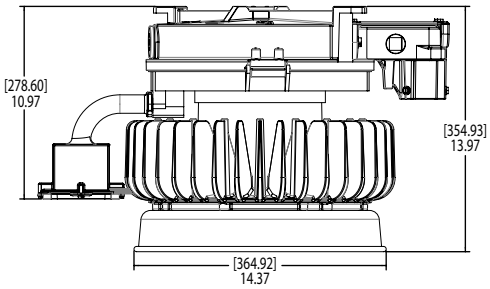

UPLIGHT SHIELD OPTION
(UNM AND P3US AND SENSOR AND UPS)
(P3US ORDERED SEPARATELY)

© 2018-2023 Acuity Brands Lighting, Inc. All rights reserved. Rev. 04/03/23 Specifications subject to change without notice.

DIMENSIONAL DATA (continued)

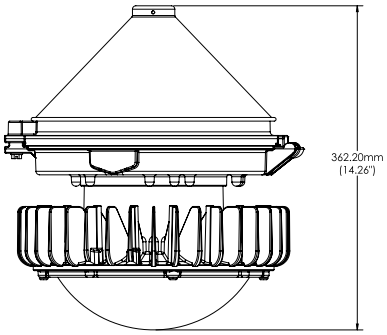

PENDANT CONE OPTION (PM AND PC)

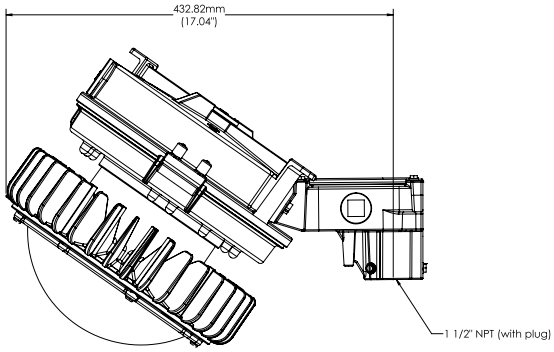

UNIVERSAL MOUNT (UNM AND P3US35)
(P3US35 ORDERED SEPARATELY)

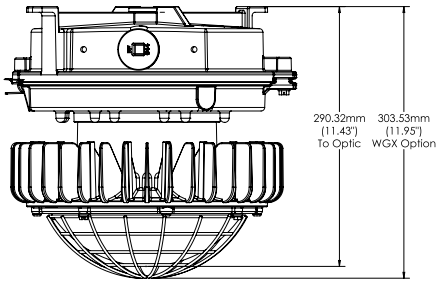

WIRE GUARD OPTION (UNM AND WGX)

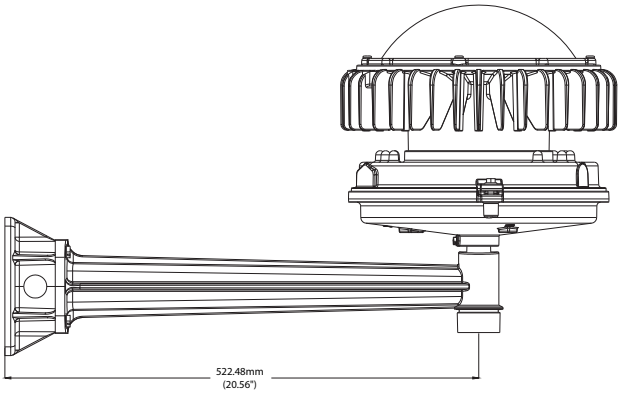

072331 SUBSTATION ARM (PM) -UP ORIENTATION

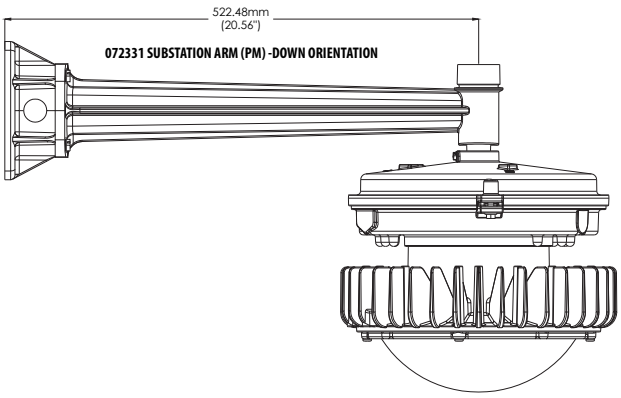

072331 SUBSTATION ARM (PM) -DOWN ORIENTATION

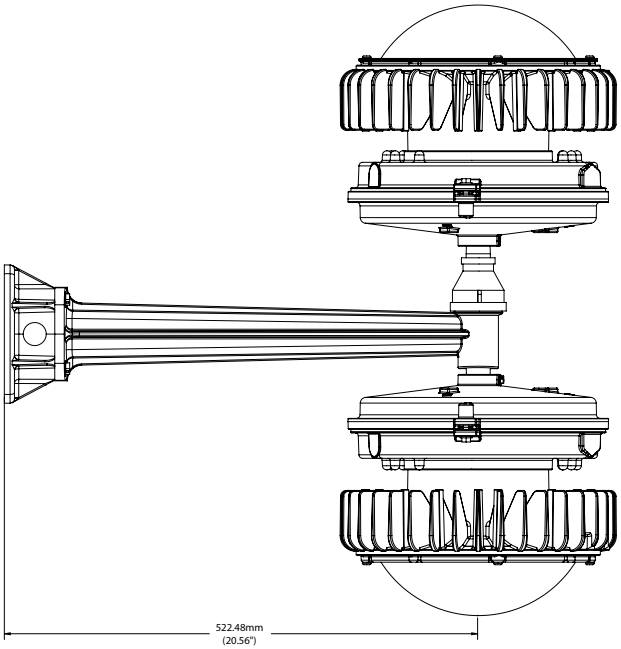

072332 TANDEM SUBSTATION ARM, (PM)

© 2018-2023 Acuity Brands Lighting, Inc. All rights reserved. Rev. 04/03/23 Specifications subject to change without notice.

OPERATIONAL DATA

Performance with AO Field Adjustable Output

	12000L		15000L		18000L		24000L		28000L	
Position	% Lumens	% Watts	% Lumens	% Watts	% Lumens	% Watts	% Lumens	% Watts	% Lumens	% Watts
8	100%	100%	100%	100%	100%	100%	100%	100%	100%	100%
7	94%	94%	94%	94%	94%	93%	95%	93%	95%	93%
6	82%	81%	83%	81%	83%	80%	83%	80%	84%	80%
5	70%	68%	71%	68%	71%	67%	72%	67%	72%	67%
4	58%	56%	58%	55%	59%	54%	59%	54%	60%	54%
3	45%	44%	45%	43%	46%	42%	47%	41%	47%	42%
2	32%	31%	32%	30%	33%	30%	33%	29%	34%	30%
1	19%	20%	19%	19%	19%	18%	20%	17%	20%	18%

Projected Lumen Maintenance (TM-21)

25°C Ambient						
Lumen Package	0 hours	15000 hours	30000 hours	45000 hours	60000 hours	100000 hours
12000LM	1	0.98	0.96	0.94	0.92	0.87
15000LM	1	0.98	0.96	0.94	0.92	0.87
18000LM	1	0.98	0.96	0.94	0.92	0.87
24000LM	1	0.98	0.96	0.94	0.92	0.87
28000LM	1	0.97	0.95	0.93	0.91	0.85

55°C Ambient						
Lumen Package	0 hours	15000 hours	30000 hours	45000 hours	60000 hours	100000 hours
12000LM	1	0.97	0.95	0.92	0.9	0.84
15000LM	1	0.97	0.94	0.92	0.89	0.83
18000LM	1	0.97	0.94	0.91	0.88	0.81
24000LM	1	0.97	0.94	0.91	0.88	0.81
28000LM	1	0.96	0.93	0.89	0.86	0.78

Impact Resistance (IK Ratings)

Lens Material	Rating
Glass	IK06
Silicone	IK10

Number of LED Boards and Drivers Used

Lumen Package	Number of LED boards per fixture	Number of drivers per fixture
12000LM	1	1
15000LM	1	1
18000LM	1	1
24000LM	1	1
28000LM	1	2

BTP Default Settings

Model	Default Operation	Occupancy Time Delay	Photocell Mode	Photocell Set-point	Low Trim	High Trim	Dim to Off Time Delay
SBG6 OCC BTP	On/Off Occupancy Only Disabled	10 minutes	Disabled	n/a	n/a	100%	Disabled
SBG10 OCC BTP	On/Off Occupancy Only Disabled	10 minutes	Disabled	n/a	n/a	100%	Disabled
SBG6 HL BTP	Occupancy w/ 0-10V Dimming (High/Low/Off)	10 minutes	Disabled	n/a	10%	100%	2.5 minutes
SBG10 HL BTP	Occupancy w/ 0-10V Dimming (High/Low/Off)	10 minutes	Disabled	n/a	10%	100%	2.5 minutes
SBG6 ADC BTP	On/Off Occupancy with Auto Dimming Photocell	10 minutes	On/Off & Auto Dim	50 fc	10%	100%	0 seconds
SBG10 ADC BTP	On/Off Occupancy with Auto Dimming Photocell	10 minutes	On/Off & Auto Dim	50 fc	10%	100%	0 seconds
SBG6 ANL BTP	High/Low/(Off) Occupancy Dimming with Auto Dimming Photocell	10 minutes	On/Off & Auto Dim	50 fc	10%	100%	Stay Dim/ Never Off
SBG10 ANL BTP	High/Low/(Off) Occupancy Dimming with Auto Dimming Photocell	10 minutes	On/Off & Auto Dim	50 fc	10%	100%	Stay Dim/ Never Off

© 2018-2023 Acuity Brands Lighting, Inc. All rights reserved. Rev. 04/03/23 Specifications subject to change without notice.

Operating Characteristics

Package	Distribution	Delivered lumens at 3000K CCT 70CRI @ 25C	Delivered lumens at 3000K CCT 80CRI @ 25C	Delivered lumens at 3000K CCT 90CRI @ 25C	Delivered lumens at 4000K CCT 70CRI @ 25C	Delivered lumens at 4000K CCT 80CRI @ 25C	Delivered lumens at 4000K CCT 90CRI @ 25C	Delivered lumens at 5000K CCT 70CRI@ 25C	Delivered lumens at 5000K CCT 80CRI@ 25C	Delivered lumens at 5000K CCT 90CRI @ 25C	Wattage	LPW @ 4000K 80CRI
12000LM	FWD	10678	9957	8319	11595	10613	8581	11595	10678	9040	83	128
	MD	11896	11093	9269	12918	11823	9561	12918	11896	10072	83	142
	MDU5	11582	10800	9024	12577	11511	9308	12577	11582	9805	83	138
	MDU5FR	10207	9518	7953	11083	10144	8203	11083	10207	8641	83	123
	LND	10308	9613	8032	11494	10245	8285	11194	10309	8728	83	123
	WD	11429	10658	8905	12411	11359	9185	12411	11429	9676	83	137
	WDU	11707	10917	9121	12712	11635	9409	12712	11707	9911	83	140
	SO	11719	10929	9131	12726	11648	9419	12726	11719	9922	83	140
	SOLND	10721	9997	8353	11642	10655	10478	11642	10721	9077	83	128
15000LM	FWD	13517	12605	10532	14678	13434	10864	14678	13517	11444	106	127
	MD	15060	14043	11734	16353	14967	12103	16353	15060	12750	106	141
	MDU5	14661	13672	11423	15921	14571	11783	15921	14661	12413	106	138
	MDU5FR	12921	12049	10067	14030	12841	10384	14030	12921	10939	106	121
	LND	13050	12169	10168	14171	12970	10488	14171	13050	11048	106	122
	WD	14468	13492	11273	15711	14379	11628	15711	14468	12249	106	136
	WDU	14820	13820	11547	16093	14729	11910	16093	14920	12547	106	140
	SO	14836	13834	11559	16110	14745	11923	16110	14836	12560	106	139
	SOLND	13571	12656	10574	14737	13488	10907	14737	13571	11490	106	127
18000LM	FWD	15503	14457	12079	16834	15408	12459	16834	15503	13125	119	129
	MD	17272	16106	13457	18755	17166	13881	18755	17272	14623	119	144
	MDU5	16815	15680	13101	18259	16712	13514	18259	16815	14236	119	140
	MDU5FR	14819	13819	11546	16091	14728	11909	16091	14819	12546	119	124
	LND	14967	13957	11661	16252	14875	12028	16252	14967	12671	119	125
	WD	16593	15473	12928	18018	16491	13336	18018	16593	14048	119	139
	WDU	16997	15850	13243	18456	16892	13660	18456	16997	14390	119	142
	SO	17015	15866	13257	18476	16910	13674	18476	17015	14405	119	142
	SOLND	15565	14515	12127	16902	15469	12509	16902	15565	13178	119	130
24000LM	FWD	21115	19690	16451	22928	20985	16969	22928	21115	17876	163	129
	MD	23524	21936	18328	25544	23379	18906	25544	23524	19916	163	143
	MDU5	22902	21356	17844	24869	22761	18406	24869	22902	19389	163	140
	MDU5FR	20183	18821	15725	21916	20059	16220	21916	20183	17087	163	123
	LND	20384	19009	15882	22135	20259	16383	22135	20385	17258	163	124
	WD	22560	21075	17608	24541	22461	18163	24541	22600	19134	163	138
	WDU	23149	21587	18036	25137	23007	18604	25137	23149	19599	163	141
	SO	23174	21610	18056	25164	23032	18624	25164	23174	19649	163	141
	SOLND	21199	19769	16517	23020	21069	17037	23020	21119	17948	163	129
28000LM	FWD	24434	22785	19038	26533	24284	19637	26533	24434	20686	210	116
	MD	27222	25385	21210	29560	27055	21878	29560	27222	23047	210	129
	MDU5	26502	24714	20649	28778	26339	21299	28778	26502	22437	210	125
	MDU5FR	23356	21779	18197	25362	23212	18770	25362	23556	19773	210	111
	LND	23589	21997	18379	25615	23444	18958	25615	23589	19971	210	112
	WD	26153	24388	20377	28399	25992	21018	28399	26153	22141	210	124
	WDU	26788	24980	20872	29089	26624	21529	29089	26788	22680	210	127
	SO	26817	25007	20894	29120	26652	21552	29120	26817	220704	210	127
	SOLND	24532	22876	19114	26639	24381	19716	26639	24532	20769	210	116

© 2018-2023 Acuity Brands Lighting, Inc. All rights reserved. Rev. 04/03/23 Specifications subject to change without notice.

Ambient Temperature Ratings

Mounting	AO Adjustable Output	SBGR, SBG, BTP, NLTAIR2 RSBG, NLTAIR2 RSBOR Sensors or NLTAIR2 RIO Control Module	NPP16 D, RPP20 D Power Packs	BP Button Photocell	E10WMCP Battery	Voltage	Lumens					Supply Wire
							12000LM	15000LM	18000LM	24000LM	28000LM	
PM YK90 UNM	NO	NO	NO	NO	NO	Any	-40°C to 65°C	-40°C to 65°C	-40°C to 65°C	-40°C to 65°C	-40°C to 55°C	90°C
	YES	NO	NO	NO	NO	Any	-40°C to 65°C	-40°C to 65°C	-40°C to 65°C	-40°C to 65°C	-40°C to 55°C	90°C
	YES	NO	NO	NO	YES	120-277V	5°C to 25°C	5°C to 25°C	5°C to 25°C	5°C to 25°C	5°C to 25°C	90°C
	NO	YES	NO	NO	NO	Any	-40°C to 65°C	-40°C to 65°C	-40°C to 65°C	-40°C to 65°C	-40°C to 55°C	90°C
	NO	YES	NO	NO	YES	120-277V	5°C to 25°C	5°C to 25°C	5°C to 25°C	5°C to 25°C	5°C to 25°C	90°C
	NO	NO	YES	NO	NO	Any	-40°C to 40°C	-40°C to 40°C	-40°C to 40°C	-40°C to 40°C	-40°C to 40°C	90°C
	NO	NO	YES	NO	YES	120-277V	5°C to 25°C	5°C to 25°C	5°C to 25°C	5°C to 25°C	5°C to 25°C	90°C
	NO	NO	NO	YES	NO	120-347V	-40°C to 50°C	-40°C to 50°C	-40°C to 50°C	-40°C to 50°C	-40°C to 50°C	90°C
	NO	NO	NO	YES	YES	120-277V	5°C to 25°C	5°C to 25°C	5°C to 25°C	5°C to 25°C	5°C to 25°C	90°C
	NO	NO	NO	NO	YES	120-277V	5°C to 25°C	5°C to 25°C	5°C to 25°C	5°C to 25°C	5°C to 25°C	90°C

Marine/NEMA4X Compatibility

Option Group	Options	Marine	NEMA4X
Distribution	FWD, MD0, MDU5, MDU5FR, LND, WD, WDU	YES	YES
	SO, SOLND	NO	NO
Mounting	PM, UNM	YES	YES
	YK90	NO	YES
Finish	DBXD, DNXD	NO	NO
	DGXD, DWHXD	YES	YES
	Any Cordset	NO	NO
Cordsets	HKMW	NO	NO
Hook	SBGR, SBGR P, SBGR D 3V	NO	NO
Individual Sensors	SBG OCC BTP, SBG HL BTP, SBG ADC BTP, SBG ANL BTP	NO	NO
Bluetooth Sensors	NLTAIR2 RSBG, NLTAIR2 RIO, NLTAIR2 RSBOR, RPP20, RPP20 ER	NO	NO
nLight Air	NPP16, NPP16 ER	NO	NO
nLight Wired	E10WMCP	NO	NO
Emergency	BP, PER, PCS, P34, P48, PSC	NO	NO
Photocontrols	AO	YES	YES
Options	CR	YES	YES
	EMD	YES	YES
	FPA	YES	YES
	NSG	NO	NO
	PC, PCPXLW	YES	YES
	UPS, UPSPXLW	YES	YES
	WGX, WGPXLW	YES	YES
	072331, 072331CTL, 072332CTL, 072332CTL	YES	NO
Mounting Accessories	P3US, P3US35	NO	NO

© 2018-2023 Acuity Brands Lighting, Inc. All rights reserved. Rev. 04/03/23 Specifications subject to change without notice.

Emergency Lumen Output

How to Estimate Delivered Lumens in Emergency Mode
Use the formula below to estimate the delivered lumens in emergency mode
Delivered Lumens = P x LPW
P = Output power of emergency driver
LPW = Lumen per watt rating of the luminaire. (See charts on page 9-11)
The LPW rating is also available at Designlight Consortium

P = 10 watts for E10WMCP

Emergency Lumen Output Example - 10 Watt Battery

Approximate Luminaire Efficacy	Approximate Lumens at 1 Minute	Approximate Lumens at 45 Minutes	Approximate Lumens at 90 Minutes
100 LPW	1000	1000	1000
110 LPW	1100	1100	1100
120 LPW	1200	1200	1200
130 LPW	1300	1300	1300
140 LPW	1400	1400	1400
150 LPW	1500	1500	1500

Options and Accessories

HKMW (PF-291) Hook

SBGR Sensor

SBG BTP Sensor and Smarthub Bluetooth Controller

nLight Wired NPP16 D Power Pack

nLight Wired NPP16 D ER Power Pack

nLight Air RSBG Sensor

nLight Air RPP20 D Power Pack

nLight Air RPP20 D ER Power Pack

nLight Air RPP20 D ER Power Pack

AO Adjustable Output Module

nLight Air RIO Control Module

PM Pendant Mount and WGX Wire Guard

UNM Universal Mount and HKMW Hook

YK90 Yoke Mount

© 2018-2023 Acuity Brands Lighting, Inc. All rights reserved. Rev. 04/03/23 Specifications subject to change without notice.