ACP1LED Series

American Compact LED Floodlight

PRODUCT OVERVIEW



Applications:

- Auto dealerships
- Schools
- Churches
- Industrial sites
- Shopping centers
- Parking lots
- Substations
- Building facades

DIMENSIONS

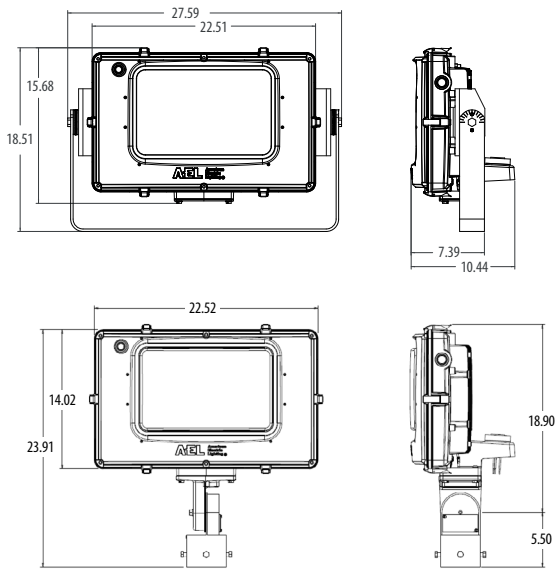

Effective Projected Area (EPA)
The EPA for the LED Flood ™ Series ACP1LED
Knuckle mounting Max EPA 2.9 sq. ft.,
Approx. 45 lbs.
Yoke mounting is Max EPA 3.1 sq. ft.,
Approx. 54 lbs.

Features:

Mechanical

Low copper content die-cast aluminum housing and electrical cover with bolts or optional stainless steel latches disengage for easy access to LED driver, surge protection, and terminal block.

Four mounting options including two variants of yoke and two variants on tenon slip-fitter. Tenon may be ordered with leads exiting the bottom or side of knuckle joint and is adjustable to fit 2-3/8 inch to 2-7/8 inch tenon.

Luminaire is vibration rated to 3G per ANSI C136.31-2018 and rated IP66 per IEC60068-2-3.

Rigorous five-stage pre-treating and painting process yields a finish that achieves a scribe creepage rating of 8 (per ASTM D1654) after over 5,000 hours exposure to salt fog chamber per ASTM B117. The yoke is provided in either painted or galvanized steel.

Electrical

LED light engine is rated minimum 100,000 hours at 25C, L70.

Electronic driver has an expected life of 100,000 hours at a 25C ambient. Driver meets maximum total harmonic distortion (THD) of 20% and is ROHS compliant.

Robust surge protection: 20kV/10kA surge protection per ANSI C136.2 is the default, with 10kV/5kA surge optional.

Luminaire available with either a 0-10V dimmable driver or DALI D4i driver. Luminaire is continuous and step dimming capable via AO option or other installed controls.

XVOLT tank driver option for protection against dropped neutrals and other power quality issues.

Optical

Six multi-die LED's combined with highly specular reflectors provide superior field to beam ratios, uniformity, and spacing.

NEMA optical pattern choice of flood (5x5), wide flood (6x6), and wide flood rectangle (6x5).

The luminaire is available with 3000K, 4000K, and 5000K CCT with minimum CRI of 70.

Optical enclosure shall be glass lens.

Optional shielding available to control light trespass and uplight.

Controls

The Acuity designed ANSI 7-pin receptacle is available, which supports traditional locking style photocontrols such as the Extreme long-life solid-state locking style photocontrol - PCLL (20 year rated life).

Optional onboard Adjustable Output module allows the light output and input wattage to be modified to meet site specific requirements, and also can allow a single fixture to be flexibly applied in many different applications.

The DC Connect option is a factory embedded low voltage dusk to dawn photocontrol that increases longevity vs. line voltage controls and also eliminates the need to separately inventory controls.

The Local Connect option provides a simple means to collect luminaire attribute data, asset location information and execute point-to-point on/off/dim commands via secure Bluetooth link using smartphone platforms.

Cell Connect is an embedded network photocontrol with cellular communication. It provides digital switching, precise dimming, and revenue grade metrology. Cell Connect leverage D4i drivers to communicate real-time data to UbiVu, a cloud-based asset management system.

Integral nLight rSBOR control is also available to provide local or network on/off/ dim control plus robust outdoor motion detection and response at up to 30' mounting heights.

Additionally, it can be equipped with sensor-ready technology to support Zhaga standard sensors enabling smart city solutions utilizing long range network nodes to enable remote monitoring and control.

Standards

Suitable for ambient temperatures from -40C to 40C. UL/CUL Listed for wet location. DesignLights Consortium® (DLC) Premium qualified product. Not all versions of this product may be DLC Premium qualified. Please check the DLC Qualified Products List at www.designlights.org/QPL to confirm which versions are qualified.

GOVERNMENT PROCUREMENT — BAA – Buy America(n) Act: Product with the BAA option qualifies as a domestic end product under the Buy American Act as implemented in the FAR and DFARS. Product with the BAA option also qualifies as manufactured in the United States under DOT Buy America regulations.

BABA – Build America Buy America: Product with the BAA option also qualifies as produced in the United States under the definitions of the Build America, Buy America Act.

Please refer to www.acuitybrands.com/buy-american for additional information.

ACP1LED Series

American Compact LED Floodlight

ORDERING INFORMATION

Series

ACP1LED

LED Performance Package

P10	38,700 Lumens
P20	43,800 Lumens
P30	49,100 Lumens
P40	53,500 Lumens
P50	56,500 Lumens

Voltage

MVOLT	Multiple voltage (120V - 277V)
347	347V
480	480V
XVOLT	277V-480V

Driver

ZT	0-10V dimmable driver
D4I	D4I driver

Optics

55	Flood (5x5)
66	Wide Flood (6x6)
65	Wide Flood Rectangle (6x5)

Color Temperature

30K	3000K CCT, 70CRI Min
40K	4000K CCT, 70CRI Min
50K	5000K CCT, 70CRI Min

Mounting Methods

TM	Tenon Slipfitter - knuckle (cord exits bottom slipfitter)
KO	Tenon Slipfitter - knuckle (cord exits via knock-out)
YK	Yoke Painted Steel
YG	Yoke Galvanized Steel

Color

GY	Gray Paint
BK	Black Paint
BZ	Bronze Paint
GI	Graphite Paint
WH	White Paint

Surge Protection

20KV	20kV/10kA w/ indicator Light Extreme Surge (fail off)
MP	10kV/5kA MOV (fail on)

Cord Length

04	4 ft cord length
05	5 ft cord length
06	6 ft cord length
08	8 ft cord length
10	10 ft cord length

Cord Type

23	12 gage, 3 conductor
43	14 gage, 3 conductor
63	16 gage, 3 conductor

Top Receptacle

NTR	No PER receptacle
PR3	3 Pin rotatable NEMA receptacle
PR7	7 Pin rotatable NEMA receptacle

Bottom Receptacle

NBR	No Bottom photocontrol receptacle
ZRB	Zhaga Receptacle on bottom of fixture

Twist-Lock Photocontrols

PCLL	Solid State Long Life Photocontrol (fail off)
PCSS	Solid State Photocontrol 120-277V (fail off) (Not CSA Listed)
SH	Shorting Cap
DZP	DTL DZP DC Zhaga Photocontrol

Embedded Controls

ALCB	Local Connect Basic
ALCC	Local Connect Custom
ALCF	Local Connect Full
DDC	DC Connect Photocontrol
UBC	Cell Connect
LRSBOR[2]	nLight Air Occ. and daylight sensor (8-15FT)
HRSBOR[2]	nLight Air Occ. and daylight sensor (15-30FT)

Misc Options

AO[1]	Field Adjustable Output
XL	No terminal block cover
NL	Nema Label
TL	Tool-less entry with latches
BAA	Buy America(n) Act and/or Build America Buy America Qualified

Accessories (Shipped Separately)

ACP1LEDFV BKSDP	Full Visor - Black Paint
ACP1LEDFV BZSDP	Full Visor - Bronze Paint
ACP1LEDFV GISDP	Full Visor - Graphite Paint
ACP1LEDFV GYSDP	Full Visor - Gray Paint
ACP1LEDFV WHSDP	Full Visor - White Paint
ACP1LEDUBV BKSDP	Upper/Bottom Visor - Black Paint
ACP1LEDUBV BZSDP	Upper/Bottom Visor - Bronze Paint
ACP1LEDUBV GISDP	Upper/Bottom Visor - Graphite Paint
ACP1LEDUBV GYSDP	Upper/Bottom Visor - Gray Paint
ACP1LEDUBV WHSDP	Upper/Bottom Visor - White Paint
ACP1LEDVG	Vandal Guard
ACP1LEDWG	Wire Guard

Notes:
1. AO not available with 20kV surge option.
2. Only available with TM mount option

American Electric Lighting®
AEL Headquarters, One Lithonia Way, Conyers Georgia 30012
www.americanelectriclighting.com Phone: 1-866-HOLOPHANE
Email: TechSupport-Lighting@AcuityBrands.com
© 2013-2025 Acuity Brands Lighting, Inc. All Rights Reserved. FL-ACP1LED 05/15/25

Warranty Five-year limited warranty. This is the only warranty provided and no other statements in this specification sheet create any warranty of any kind. All other express and implied warranties are disclaimed. Complete warranty terms located at: www.acuitybrands.com/support/warranty/terms-and-conditions

Note: Actual performance may differ as a result of end-user environment and application. All values are design or typical values, measured under laboratory conditions at 25 °C. Specifications subject to change without notice.

Please contact your sales representative for the latest product information.

OPTIONS MATRIX

ACP1LED		Voltage				Driver		Top Receptacle			Bottom Receptacle		Twist-Lock Photocontrols				Embedded Controls							
		MVOLT	347	480	XVOLT	ZT	D4i	NTR	PR3	PR7	NBR	ZRB	PCLL	PCSS	SH	DZP	ALCB	ALCC	ALCF	DDC	UBC	HRSBOR	LRSBOR	AO
Voltage	MVOLT					Y	Y	Y	Y	Y	Y	Y	Y	Y	Y	Y	Y	Y	Y	Y	Y	Y	Y	Y
	347					Y	N	Y	Y	Y	Y	Y	Y	N	Y	N	N	N	N	N	N	Y	Y	Y
	480					Y	N	Y	Y	Y	Y	Y	Y	N	Y	N	N	N	N	N	N	Y	Y	Y
	XVOLT					Y	Y	Y	Y	Y	Y	Y	N	N	Y	Y	Y	Y	Y	Y	Y	Y	Y	Y
Driver	ZT	Y	Y	Y	Y			Y	Y	Y	Y	N	Y	Y	Y	N	N	N	N	N	N	Y	Y	Y
	D4i	Y	N	N	Y			Y	N	Y	Y	Y	Y	Y	Y	Y	Y	Y	Y	Y	Y	N	N	N
Top Receptacle	NTR	Y	Y	Y	Y	Y	Y				Y	Y	N	N	N	Y	Y	Y	Y	Y	Y	Y	Y	Y
	PR3	Y	Y	Y	Y	Y	N				Y	N	Y	Y	Y	N	N	N	N	N	N	N	N	Y
	PR7	Y	Y	Y	Y	Y	Y				Y	N	Y	Y	Y	N	N	N	N	N	N	N	N	Y
Bottom Receptacle	NBR	Y	Y	Y	Y	Y	Y	Y	Y	Y			Y	Y	Y	N	Y	Y	Y	Y	Y	Y	Y	Y
	ZRB	Y	Y	Y	Y	N	Y	Y	N	N			N	N	N	Y	N	N	N	N	N	N	N	N
Twist-Lock Photocontrol	PCLL	Y	Y	Y	N	Y	Y	N	Y	Y	Y	N					N	N	N	N	N	N	N	Y
	PCSS	Y	N	N	N	Y	Y	N	Y	Y	Y	N					N	N	N	N	N	N	N	Y
	SH	Y	Y	Y	Y	Y	Y	N	Y	Y	Y	N					N	N	N	N	N	N	N	Y
	DZP	Y	N	N	Y	N	Y	Y	N	N	N	Y					N	N	N	N	N	N	N	N
Embedded Controls	ALCB	Y	N	N	Y	N	Y	Y	N	N	Y	N	N	N	N	N								
	ALCC	Y	N	N	Y	N	Y	Y	N	N	Y	N	N	N	N	N								
	ALCF	Y	N	N	Y	N	Y	Y	N	N	Y	N	N	N	N	N								
	DDC	Y	N	N	Y	N	Y	Y	N	N	Y	N	N	N	N	N								
	UBC	Y	N	N	Y	N	Y	Y	N	N	Y	N	N	N	N	N								
	HRSBOR	Y	Y	Y	Y	Y	N	Y	N	N	Y	N	N	N	N	N								
	LRSBOR	Y	Y	Y	Y	Y	N	Y	N	N	Y	N	N	N	N	N								
	AO	Y	Y	Y	Y	Y	N	Y	Y	Y	Y	N	Y	Y	Y	N								

ACP1LED		Driver/Voltage							
		MVOLT		347		480		XVOLT	
		ZT	D4I	ZT	D4I	ZT	D4I	ZT	D4I
Performance Package	P10	Y	Y	Y	N	Y	N	Y	Y
	P20	Y	Y	Y	N	Y	N	Y	Y
	P30	Y	Y	Y	N	Y	N	Y	Y
	P40	Y	Y	Y	N	Y	N	Y	Y
	P50	Y	Y*	N	N	N	N	N	N

*Only suitable up to 35C ambient temperatures

D4i Driver Option Defaults			
Setting	**Receptacle / Control**	**Default Value**	***Alternate Values***
DALI Power Bus	No Receptacle or Control	**ON**	*Off*
	ALCB / ALCF / ALCC	**ON**	*none*
	DDC	**ON**	*none*
	UBC	**ON**	*none*
	PR7	**OFF**	*On*
	ZRB	**ON**	*Off*
	DZP	**ON**	*none*
Dimming Type	Any	**LINEAR**	*Logarithmic*
24V AUX	Any	**ON (Not Connected)**	*none*
Scenes Data	Any	**0 (blank)**	*01-255*

*To program different settings, consult factory; RFD is required

American Electric Lighting®
AEL Headquarters, One Lithonia Way, Conyers Georgia 30012
www.americanelectriclighting.com Phone: 1-866-HOLOPHANE
Email: TechSupport-Lighting@AcuityBrands.com

© 2013-2025 Acuity Brands Lighting, Inc. All Rights Reserved. FL-ACP1LED 05/15/25

Warranty Five-year limited warranty. This is the only warranty provided and no other statements in this specification sheet create any warranty of any kind. All other express and implied warranties are disclaimed. Complete warranty terms located at: www.acuitybrands.com/support/warranty/terms-and-conditions

Note: Actual performance may differ as a result of end-user environment and application. All values are design or typical values, measured under laboratory conditions at 25 °C. Specifications subject to change without notice.

Please contact your sales representative for the latest product information.

ACP1LED Series

American Compact LED Floodlight

PERFORMANCE PACKAGE

ACP1LED	Distribution	Input Watts	3000K		4000K		5000K		LDD @ 25°C		
			Lumens	LPW	Lumens	LPW	Lumens	LPW	50k hours	75k hours	100k hours
P10	55	265	38,652	146	39,367	149	40,082	151	0.92	0.89	0.85
	65		39,111	148	39,834	151	40,557	153			
	66		37,954	143	38,656	146	39,357	149			
P20	55	305	43,766	144	44,576	146	45,385	149	0.92	0.89	0.85
	65		44,285	145	45,104	148	45,923	151			
	66		42,975	141	43,770	144	44,564	146			
P30	55	349	49,139	141	50,047	143	50,956	146	0.92	0.89	0.85
	65		49,722	142	50,641	145	51,560	148			
	66		48,250	138	49,143	141	50,035	143			
P40	55	388	53,474	138	54,463	140	55,451	143	0.91	0.87	0.84
	65		54,108	140	55,109	142	56,109	145			
	66		52,507	135	53,487	138	54,449	140			
P50	55	418	56,480	135	57,524	138	58,568	140	0.90	0.85	0.81
	65		57,150	137	58,206	139	59,263	142			
	66		55,489	133	56,484	135	57,510	138			

Performance Package	Watts	Current (A)					
		120V	208V	240V	277V	347V	480V
P10	265	2.20	1.27	1.10	0.97	0.77	0.56
P20	305	2.55	1.46	1.27	1.11	0.89	0.64
P30	349	2.92	1.67	1.45	1.27	1.02	0.74
P40	388	3.24	1.85	1.60	1.39	1.13	0.81
P50	418	3.48	2.01	1.74	1.51	1.2	0.87

Ambient Temperature Factor				
0°C	15°C	25°C	35°C	40°C
1.03	1.01	1.00	0.99	0.98

American Electric Lighting®
AEL Headquarters, One Lithonia Way, Conyers Georgia 30012
www.americanelectriclighting.com Phone: 1-866-HOLOPHANE
Email: TechSupport-Lighting@AcuityBrands.com
© 2013-2025 Acuity Brands Lighting, Inc. All Rights Reserved. FL-ACP1LED 05/15/25

Warranty Five-year limited warranty. This is the only warranty provided and no other statements in this specification sheet create any warranty of any kind. All other express and implied warranties are disclaimed. Complete warranty terms located at: www.acuitybrands.com/support/warranty/terms-and-conditions

Note: Actual performance may differ as a result of end-user environment and application. All values are design or typical values, measured under laboratory conditions at 25 °C. Specifications subject to change without notice.

Please contact your sales representative for the latest product information.