ABVSN

Absorb VSN is a slim unlit panel, designed to complement the Absorb V lit version while adding more sound absorbing material to a space.



Certified

Buy American

Mounting options



Aircraft Cable
(S)

Dimensions

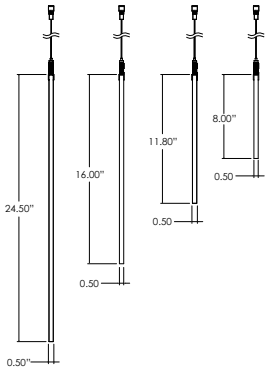

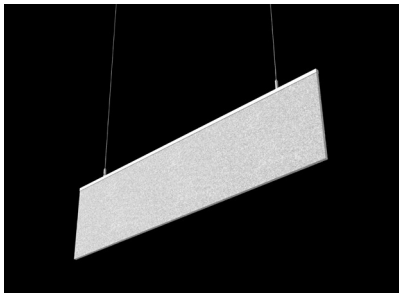

Need help?
Don't see what you need?
We know that having so many options can be overwhelming. Please reach out to our factory for any specific request or questions you have.

Our Design Assist team (**designassist@alights.com**) is here to make the process move smoothly.

ABVSN					
SERIES	**LENGTH**	**MOUNTING**	**HEIGHT**	**MOUNTING BRACKET FINISH**	**ACOUSTICS FINISH**
ABVSN	**_** Nominal[1]	**S** Aircraft Cable[1]	**8** 8 in. **12** 12 in. **16** 16 in. **24** 24 in.	**T** Titanium **W** White **B** Black **O_** Other[1]	**Standard Colors** **ABF** **AWF** **BBF** **BOF** **BTF** **BYF** **CHF** **NBF** **OBF** **PGF** **REF** **SGF** **TGF** **ZFF** **Signature Colors** **BGF** **BKF** **DBF** **DTF** **DYF** **GGF** **LBF** **LGF** **MGF** **OAF** **PBF** **PNF** **PPF** **SBF** **TOF** **TPF**
	[1] Specify feet in increments of 1'. Longest length is 8'. Lengths longer than 8' are made up of separate groups of panels to be mounted separately, end to end, to create the appearance of a row. Contact Design Assist for exact length options.	[1] Standard 48" field adjustable cable, specify length to nearest inch if over 48".		[1] Specify RAL# or other custom color.	*See Acoustic color chart for reference. Signature colors require longer lead time.

Project name _____ Type _____ Date _____ Quantities _____

Fixture dimensions

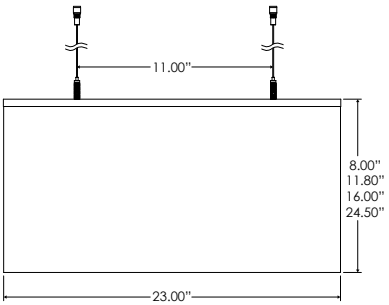



Aircraft Cable
(S)

Absorb VSN 2'

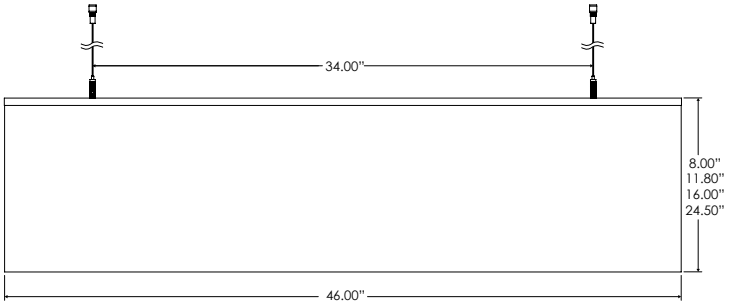

Absorb VSN 4'

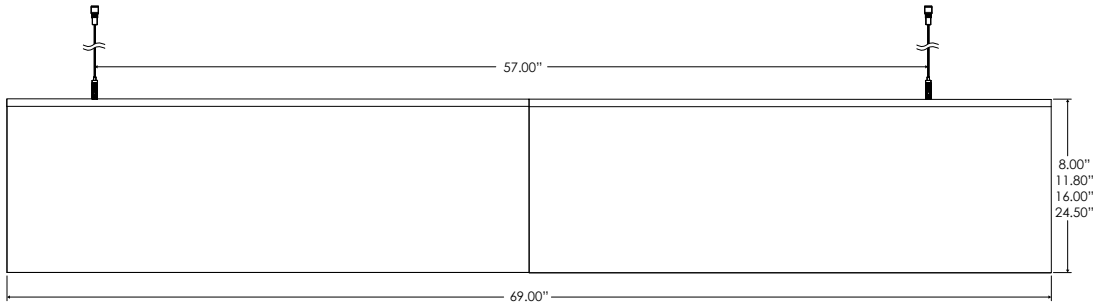

Absorb VSN 6'

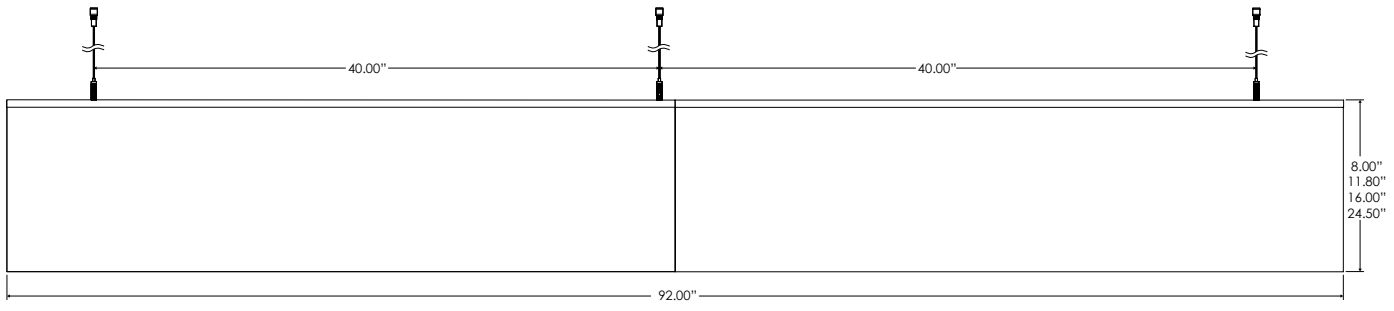

Absorb VSN 8'

Project name | Type | Date | Quantities

Acoustic color chart

Standard colors



ABF
Azure Blue



AWF
Arctic White



BBF
Basic Black



BOF
Blood Orange



BTF
Battleship Grey



BYF
Banana Yellow



CHF
Charcoal



NSF
Navy Blue



OBF
Ocean blue



PGF
Pear Green



REF
Red



SGF
Silver Grey



TGF
Titanium Gray



ZFF
Zinfandel

Signature colors



BGF
Bubble Gum



BKF
Dark Brown



DBF
Denim Blue



DTF
Deep Teal Green



DYF
Daisy Yellow



GGF
Grass Green



LBF
Light Beige



LGF
Lime Green



MGF
Moss Green



OAF
Oak Brown



PBF
Peanut Brown



PNF
Pinot Noir



PPF
Plum Purple



SBF
Sky Blue



TOF
Tangerine



TPF
Tulip Purple

Color chart for reference only. Due to the dye process, colors may vary from batch to batch, please consult Design Assist for details.

Project name | Type | Date | Quantities

LINEAR DIMENSIONS

Nominal dimension of each fixture can be order in increments of 1' (up to 8' per felt panel).

Custom - Contact Design Assist for modifications to product not detailed within the specification sheets.

MOUNTING

Suspension with aircraft cables. Aircraft cable set includes 48" standard length 1/16" stainless steel adjustable aircraft cables with secure micro grippers to field set suspension length, comes factory installed in fixture.

ACOUSTICS

Fire tested according to ASTM E-84 Class A. The carefully studied hallow core design and the large surface area contribute to lowering the reverberation time in a set environment by absorbing sound frequencies (ideal for human voice range 250Hz to 2000Hz). Material has inherent NRC of 0.75 (lab tests pending). As results may vary, it is recommended to consult sound professionals for optimal spacing, positioning and quantity of acoustic material for your environment.

FINISH

Electrostatically applied powder coat finish. Standard finish options include titanium, white, and black. Other colors and custom finish options available, specify RAL# or contact factory regarding custom finish requirement.

LISTING

The Absorb VSN is assembled in the U.S.A. and complies with the Buy America(n) Act (BAA) government procurement requirements under FAR, DFARS, and DOT.

WARRANTY

Please refer to the full terms and conditions on our website:
www.alights.com/downloads/warranty/