Consistent with LEED® goals & Green Globes™ criteria for light pollution reduction

Autobahn Series ATBX

Roadway & Security Lighting

PRODUCT OVERVIEW

Applications:

Residential streets
Parking lots
General security lighting

DIMENSIONS

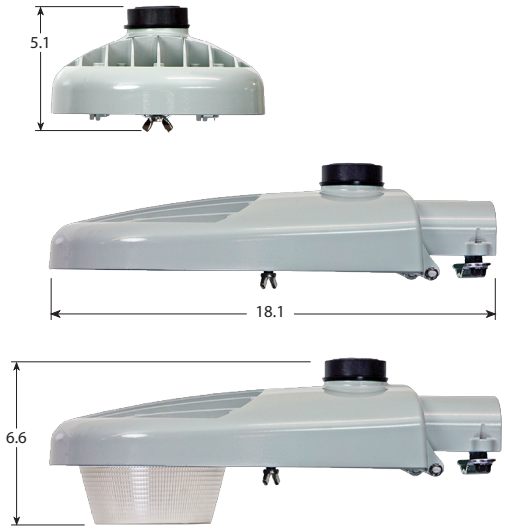

Effective Projected Area (EPA) The EPA for the ATBX is .26 sq. ft.
Approx. Wt. = 8lbs.

STANDARDS

DesignLights Consortium® (DLC) qualified product. Not all versions of this product may be DLC qualified. Please check the DLC Qualified Products List at www.designlights.org/QPL to confirm which versions are qualified.

Color temperatures of ≤ 3000K must be specified for International Dark-Sky Association certification.

Rated for -40°C to 40°C ambient
CSA Certified to U.S. and Canadian standards
Complies with ANSI: C136.2, C136.10, C136.14, C136.31, C136.15, C136.37

GOVERNMENT PROCUREMENT — BAA – Buy America(n) Act: Product with the BAA option qualifies as a domestic end product under the Buy American Act as implemented in the FAR and DFARS. Product with the BAA option also qualifies as manufactured in the United States under DOT Buy America regulations.

BABA – Build America Buy America: Product with the BAA option also qualifies as produced in the United States under the definitions of the Build America, Buy America Act.

Please refer to www.acuitybrands.com/buy-american for additional information.

Note: Actual performance may differ as a result of end-user environment and application. Specifications subject to change without notice.

Features:

OPTICAL

Same Light: Performance is comparable to 50W – 150W HPS and up to 175W Mercury Vapor roadway and security lighting luminaires.

White Light: Correlated color temperature - 4000K, 70 CRI minimum, 3000K, 70 CRI minimum.

IP66 rated borosilicate glass optics ensure longevity and minimize dirt depreciation. Unique IP66 rated LED light engines provide 0% uplight and restrict backlight to within sidewalk depth, providing optimal application coverage and optimal pole spacing.

Available distributions are Type II, III, IV, and V roadway distributions. When used with the optional acrylic refractor the unit provides approximately 10% uplight and increased vertical foot-candles

ELECTRICAL

Expected Life: LED light engines are rated >100,000 hours at 25°C, L70. Electronic driver has an expected life of 100,000 hours at a 25°C ambient.

Lower Energy: Saves an expected 40-60% over comparable HID luminaires.

Standard surge protection is 20kV/10kA "Extreme Level" per ANSI C136.2. An optional MOV pack provides 10kV/5kA "Enhanced Level.

Luminaire ships with a 0-10v dimmable driver. Luminaire is continuous and step dimming capable via A0 option or controls installed on P7 photocontrol receptacle option.

MECHANICAL

Includes standard AEL lineman-friendly features such as tool-less entry, 3 station terminal block and quick disconnects. Bubble level located inside the electrical compartment for easy leveling at installation.

Rugged die-cast aluminum housing and door are polyester powder-coated for durability and corrosion resistance. Rigorous five-stage pre-treating and painting process yields a finish that achieves a scribe creepage rating of 8 (per ASTM D1654) after over 5000 hours exposure to salt fog chamber (operated per ASTM B117).

Mast arm mount is adjustable for arms from 1-1/4" to 2" (1-5/8" to 2-3/8" O.D.) diameter. The 2 – bolt clamping mechanism provides 3G vibration rating per ANSI C136.31.

CONTROLS

NEMA 3 pin photocontrol receptacle is standard, with the Acuity designed ANSI standard 7 pin receptacle optionally available.

Premium solid state locking-style photocontrol – PCSS (10 year rated life) Extreme long life solid state locking-style photocontrol – PCL1 (20 year rated life)

Optional onboard Adjustable Output module allows the light output and input wattage to be modified to meet site specific requirements, and also can allow a single fixture to be flexibly applied in many different applications.

© 2014-2024 Acuity Brands Lighting, Inc.

ORDERING INFORMATION

Series

ATBX Autobahn LED Roadway & Security

Performance Packages

P10 2,000 lumens
P20 2,500 lumens
P30 3,200 lumens
P40 3,900 lumens
P50 5,600 lumens
P60 6,600 lumens
P70 7,400 lumens

Voltage

MVOLT Multi-volt, 120-277V

Optics

R2 Roadway Type II
R3 Roadway Type III
R4 Roadway Type IV
R5 Roadway Type V
D3 [3,4] Type III, Drop Refractor included
D5 [3,4] Type V, Drop Refractor included

Options

Color Temperature (CCT)
(Blank) 4000K CCT, 70 CRI Min.
3K 3000K CCT, 70 CRI Min.

Paint
Blank Gray (Standard)
BK Black
WH White
BZ Bronze

Surge Protection
Blank Standard 20kV/10kA SPD
MP MOV Pack

Misc.
VR Visual Comfort Refractor
HSS House Side Shield
NL NEMA Label
XL Not CSA Certified
BAA Buy America(n) Act and/or Build America Buy America Qualified

Controls
(Blank) 3 Pin NEMA Photocontrol Receptacle
NR[1] No Photocontrol Receptacle
DM[2] 0V-10V Dimmable Driver
P7 7 Pin Photocontrol Receptacle (dimmable driver included)
PCSS[1] DTL DSS Photocontrol
PCLL[1] DTL DLL Photocontrol 120-277V
AO Field Adjustable Output
SH Shorting Cap

Packages
(Blank) Standard Pack
JP Job Pack

Install Packages
PKGS DTL DSS Photocontrol
PKGL DTL DLL Photocontrol
Packages ship with selected photocontrol, 24", 1 1/4" diameter arm, 5' of prewire and mounting hardware

Accessories
ATBXREF Drop Refractor for field installation
ATBXHSS House Side Shield for field installation
ATBXLTS Light Trespass Shield for field installation
ATBXVR-XX Comfort Refractor & Uplight Skirt, Select Paint (XX) to Match Fixture

Notes
1. Not available with Install Packages.
2. Not available with AO option.
3. Not IDA Compliant
4. Not compatible with HSS or LTS shields.

American Electric Lighting
AEL Headquarters, One Lithonia Way, Conyers Georgia 30012
www.americanelectriclighting.com Phone: 1-866-HOLOPHANE
Email: TechSupport-Lighting@AcuityBrands.com
© 2014-2024 Acuity Brands Lighting, Inc. All Rights Reserved.

Warranty Five-year limited warranty. This is the only warranty provided and no other statements in this specification sheet create any warranty of any kind. All other express and implied warranties are disclaimed. Complete warranty terms located at: www.acuitybrands.com/support/warranty/terms-and-conditions

Note: Actual performance may differ as a result of end-user environment and application. All values are design or typical values, measured under laboratory conditions at 25 °C. Specifications subject to change without notice.

Please contact your sales representative for the latest product information.

PERFORMANCE PACKAGE

Performance Package	Distribution	Input Watts	3000K CCT, 70 CRI					4000K CCT, 70 CRI					LLD @ 25C		
			Lumens	LPW	B	U	G	Lumens	LPW	B	U	G	50K Hours	75K Hours	100K Hours
P10	R2	14	1,956	140	1	0	1	2,030	145	1	0	1	0.92	0.89	0.85
	R3		1,955	140	0	0	1	2,011	144	0	0	1			
	R4		1,982	142	1	0	1	1,974	141	1	0	1			
	R5		2,145	153	1	0	0	2,160	154	1	0	0			
	D3		1,908	136	1	2	1	1,963	140	1	2	1			
	D5		2,077	148	1	2	1	2,092	149	1	2	1			
P20	R2	18	2,455	136	1	0	1	2,575	143	1	0	1	0.92	0.89	0.85
	R3		2,473	137	1	0	1	2,547	142	1	0	1			
	R4		2,505	139	1	0	1	2,497	139	1	0	1			
	R5		2,715	151	2	0	0	2,735	152	2	0	0			
	D3		2,414	134	1	2	1	2,486	138	1	2	1			
	D5		2,629	146	1	2	1	2,648	147	1	2	1			
P30	R2	23	3,102	135	1	0	1	3,243	141	1	0	1	0.92	0.89	0.85
	R3		3,125	136	1	0	1	3,232	141	1	0	1			
	R4		3,153	137	1	0	1	3,150	137	1	0	1			
	R5		3,422	149	2	0	1	3,431	149	2	0	1			
	D3		3,050	133	1	2	1	3,155	137	1	2	1			
	D5		3,314	144	1	2	1	3,322	144	1	2	1			
P40	R2	28	3,603	129	1	0	1	3,790	135	1	0	1	0.92	0.89	0.85
	R3		3,705	132	1	0	1	3,890	139	1	0	1			
	R4		3,640	130	1	0	2	3,817	136	1	0	2			
	R5		3,971	142	2	0	1	4,167	149	2	0	1			
	D3		3,617	129	1	2	2	3,797	136	1	2	2			
	D5		3,845	137	2	2	1	4,035	144	2	2	1			
P50	R2	41	5,426	132	2	0	2	5,425	132	2	0	2	0.92	0.89	0.85
	R3		5,248	128	1	0	2	5,615	137	1	0	2			
	R4		5,300	129	1	0	2	5,462	133	1	0	2			
	R5		5,647	138	3	0	1	6,033	147	3	0	1			
	D3		5,123	125	1	3	2	5,481	134	1	3	2			
	D5		5,468	133	2	3	2	5,842	142	2	3	2			
P60	R2	51	6,392	125	2	0	2	6,416	126	2	0	2	0.92	0.88	0.84
	R3		6,208	122	1	0	2	6,635	130	1	0	2			
	R4		6,207	122	1	0	2	6,432	126	1	0	2			
	R5		6,690	131	3	0	1	7,127	140	3	0	1			
	D3		6,059	119	1	3	2	6,477	127	1	3	2			
	D5		6,478	127	2	3	2	6,901	135	3	3	2			
P70	R2	60	7,133	140	2	0	2	7,246	142	2	0	2	0.92	0.88	0.84
	R3		6,967	137	1	0	2	7,449	146	1	0	2			
	R4		6,957	136	1	0	2	7,235	142	1	0	2			
	R5		7,492	147	3	0	1	7,939	156	3	0	1			
	D3		6,800	133	2	3	2	7,271	143	2	3	2			
	D5		7,255	142	3	3	2	7,688	151	3	3	2			

American Electric Lighting®
AEL Headquarters, One Lithonia Way, Conyers Georgia 30012
www.americanelectriclighting.com Phone: 1-866-HOLOPHANE
Email: TechSupportINF@AcuityBrands.com
© 2014-2024 Acuity Brands Lighting, Inc. All Rights Reserved. Rev. 12/31/24 ATBX

Warranty Five-year limited warranty. This is the only warranty provided and no other statements in this specification sheet create any warranty of any kind. All other express and implied warranties are disclaimed. Complete warranty terms located at: www.acuitybrands.com/support/warranty/terms-and-conditions

Note: Actual performance may differ as a result of end-user environment and application. All values are design or typical values, measured under laboratory conditions at 25 °C. Specifications subject to change without notice.

Please contact your sales representative for the latest product information.

PERFORMANCE DATA with VISUAL COMFORT REFRACTOR

Performance Package	Distribution	Input Watts	3000K CCT, 70 CRI					4000K CCT, 70 CRI					LLD @ 25C		
			Lumens	LPW	B	U	G	Lumens	LPW	B	U	G	50K Hours	75K Hours	100K Hours
P10	R2 with VR	14	1,686	120	1	0	1	1,747	125	1	0	1	0.92	0.89	0.85
	R3 with VR		1,669	119	1	0	1	1,698	121	1	0	1			
	R4 with VR		1,602	114	1	0	1	1,626	116	1	0	1			
	R5 with VR		1,814	130	1	0	1	1,862	133	1	0	1			
P20	R2 with VR	18	2,124	118	1	0	1	2,205	123	1	0	1	0.92	0.89	0.85
	R3 with VR		2,104	117	1	0	1	2,138	119	1	0	1			
	R4 with VR		2,019	112	1	0	1	2,053	114	1	0	1			
	R5 with VR		2,290	127	1	0	1	2,346	130	1	0	1			
P30	R2 with VR	23	2,684	117	1	0	1	2,788	121	1	0	1	0.92	0.89	0.85
	R3 with VR		2,659	116	1	0	1	2,699	117	1	0	1			
	R4 with VR		2,553	111	1	0	1	2,594	113	1	0	1			
	R5 with VR		2,892	126	2	0	1	2,969	129	2	0	1			
P40	R2 with VR	28	3,240	116	1	0	1	3,369	120	1	0	1	0.92	0.89	0.85
	R3 with VR		3,204	114	1	0	1	3,261	116	1	0	1			
	R4 with VR		3,081	110	1	0	2	3,124	112	1	0	2			
	R5 with VR		3,495	125	2	0	1	3,584	128	2	0	1			
P50	R2 with VR	41	4,633	113	1	0	2	4,818	118	1	0	2	0.92	0.89	0.85
	R3 with VR		4,499	110	1	0	2	4,617	113	1	0	2			
	R4 with VR		4,343	106	1	0	2	4,504	110	1	0	2			
	R5 with VR		4,869	119	2	0	1	5,117	125	2	0	1			
P60	R2 with VR	51	5,495	108	2	0	2	5,710	112	2	0	2	0.92	0.88	0.84
	R3 with VR		5,330	105	1	0	2	5,490	108	1	0	2			
	R4 with VR		5,145	101	1	0	2	5,328	104	1	0	2			
	R5 with VR		5,771	113	3	0	1	6,061	119	3	0	1			
P70	R2 with VR	60	6,167	121	2	0	2	6,396	125	2	0	2	0.92	0.88	0.84
	R3 with VR		5,978	117	1	0	2	6,110	120	1	0	2			
	R4 with VR		5,772	113	1	0	2	5,962	117	1	0	2			
	R5 with VR		6,482	127	3	0	1	6,799	133	3	0	2			

American Electric Lighting®
AEL Headquarters, One Lithonia Way, Conyers Georgia 30012
www.americanelectriclighting.com Phone: 1-866-HOLOPHANE
Email: TechSupportINF@AcuityBrands.com
© 2014-2024 Acuity Brands Lighting, Inc. All Rights Reserved. Rev. 12/31/24 ATBX

Warranty Five-year limited warranty. This is the only warranty provided and no other statements in this specification sheet create any warranty of any kind. All other express and implied warranties are disclaimed. Complete warranty terms located at: www.acuitybrands.com/support/warranty/terms-and-conditions

Note: Actual performance may differ as a result of end-user environment and application. All values are design or typical values, measured under laboratory conditions at 25 °C. Specifications subject to change without notice.

Please contact your sales representative for the latest product information.

UMR POLE ADAPTOR

RECOMMENDED FOR USE WITH POLES OF 4" DIAMETER OR SMALLER

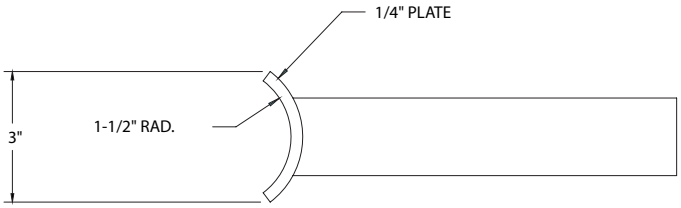

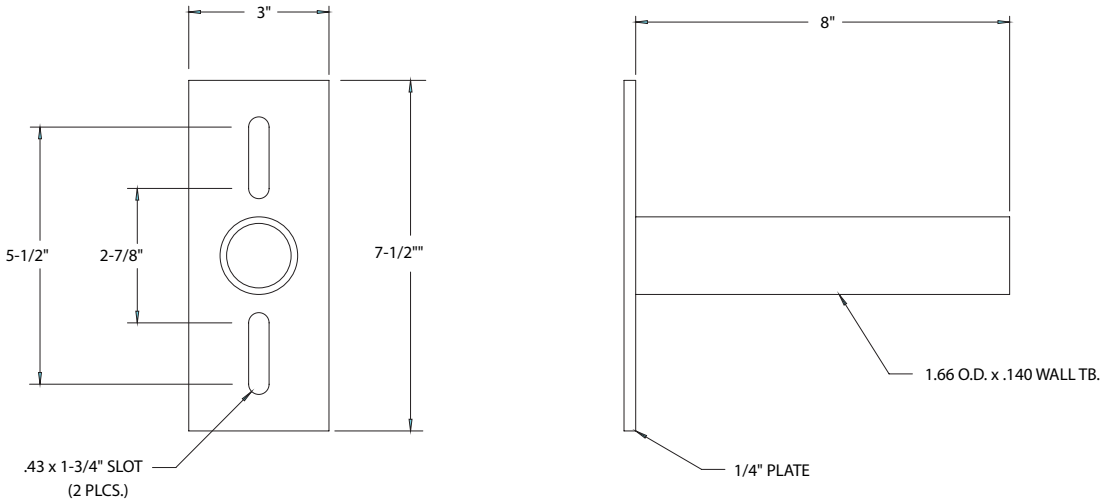

UMS POLE ADAPTOR

American Electric Lighting
AEL Headquarters, One Lithonia Way, Conyers Georgia 30012
www.americanelectriclighting.com Phone: 1-866-HOLOPHANE
Email: TechSupport-Lighting@AcuityBrands.com
© 2014-2024 Acuity Brands Lighting, Inc. All Rights Reserved. Rev. 12/31/24 ATBX

Warranty Five-year limited warranty. This is the only warranty provided and no other statements in this specification sheet create any warranty of any kind. All other express and implied warranties are disclaimed. Complete warranty terms located at: www.acuitybrands.com/support/warranty/terms-and-conditions

Note: Actual performance may differ as a result of end-user environment and application. All values are design or typical values, measured under laboratory conditions at 25 °C. Specifications subject to change without notice.

Please contact your sales representative for the latest product information.