EXPLOSION-PROOF – INTRODUCTION & LOGIC

HOSTILE LITE® LED

Class I, Div. 1 & 2, Groups C,D
Class I, Zones 1 & 2, Groups IIB, IIA
Class II, Div. 1 & 2, Groups E,F,G
Class III, Div. 1 & 2
Suitable for wet locations
Suitable for Paint Spray Booth
Marine Rated (US only)
Type 3, 4, 4X
Factory Sealed

Certified - File LR11713

FEATURES-SPECIFICATIONS

Features

- Compact Explosion-proof with Traditional Industrial Appearance and Suitability
- Fluted; Dome or Angle Reflectors
- Optional Mounting arrangements including Pendant, Wall, Ceiling, and Stanchion
- EML LED Housings can be retrofitted to existing EZ splice boxes; upgrade from Incandescent, Fluorescent or HID
- Energy Savings – Less than 55 Watts of Power
- LED Array Life – 100,000+ hours with 70% initial lumens
- Long Fixture Life – 50,000 - 55,000 maintenance free hours
- Crisp White Light for Excellent Color Rendering – Chromaticity 5000K (CCT range; approx. 70 CRI
- Instant on – Including after power interruption
- Solder-LESS LED Board Connections – Vibration Resistant
- Factory Sealed Construction – No external seal required, simply wire mouting cap and thread-in fixture to install
- **Warm LED color option available with 3070**

Materials

- Housing, splice box and guards corrosion resistant copper-free aluminum alloy
- Baked powder epoxy/polyester finish, electorstatically applied for complete, uniform corrosion protection
- All external hardware – Stainless Steel
- Reflectors are aluminum with white finish

Electrical Ratings

- Ambient suitability -40°C to 55°C
- “World Voltage” 120-277VAC 50/60Hz

Suitable for Paint Spray Booth Applications

EML SERIES

EXPLOSION-PROOF – LOGIC, COMPONENTS, AND RATINGS

EML 50 30 A2 G

TANK & GLOBE WITH DRIVER AND LEDS
EML – Tank w/Fluted Globe

WATTAGE
40W – LED
50W – LED

VOLTAGE
30 – 120-277VAC 50/60Hz
33 – 347-480V (40W only)

ACCESSORIES (SOLD SEPARATELY)
ERSD30 – Dome Reflector
ERA30 – Angle Reflector

GUARD
G – Guard

MOUNTING TYPE
A2 – 3/4" Pendant
A3 – 1" Pendant
X2 – 3/4" Ceiling
X3 – 1" Ceiling
B2 – 3/4" Bracket
B3 – 1" Bracket
D4 – 1-1/4" / 1-1/2" Stanchion

OPTIONS
AN – Assembled Fixture
3070 - 3000K (CCT) and 70 CRI LEDs

ORDERING INFORMATION AND AMBIENT SUITABILITY

CATALOG NO.	WEIGHT LBS./KG	WATTS	VOLTAGE	AMPS	EML FLUTED LUMENS	EMLC CLEAR LUMENS	C1D1/C1Z1		C2D1	
							40°C	55°C	40°C	55°C
EML4030	26.00 / 11.79	40	120-277VAC	0.46-0.16	3479	3750	T6	T6	T4A (EFG)	T4 (EFG)
EML4033			347-480VAC	0.14-0.10						
EML5030		50	120-277VAC	0.43-0.18	5740	5741	T6	T6	T4A (EFG)	T4 (EFG)

TYPICAL WEIGHTS (LBS.) W/STANDARD GLOBE AND GUARD - EML (C) SERIES

Pendant 29.33	Ceiling 31.79	Wall 33.25	Stanchion 30.94

Pendant

Ceiling

Wall Bracket

25° Stanchion

EMG2

Factory Sealed Photocell VMHKPC1

EZ MOUNTING BRACKETS

CATALOG NUMBER				HUB SIZE
PENDANT	CEILING	WALL	STANCHION	
EZA2	EZX2	EZB2	—	3/4"
EZA3	EZX3	EZB3	—	1"
—	—	—	EZD4*	1-1/4" / 1-1/2"*

** 1-1/2" furnished with 1-1/2" - 1-1/4" reducer*

ERSD30 Standard Dome

EMGS3

ERA30 Angle Dome

EML - EMLC LED ACCESSORIES

DESCRIPTION	CATALOG NUMBER
Guard	EMG2
Dome Reflector	ERSD30
Angle Reflector	ERA30
CIDI C2D1 N4X Photocell 120VAC	VMHKPC1
CIDI C2D1 N4X Photocell 208-277VAC	VMHKPC2
Replacement Fluted Globe & Support	EMGS3
Replacement Clear Globe & Support	EMGS2
Adapter to old Killark "H" Series or Crouse Hinds®	EAC/EACH

EAC/EACH

EML4530

EXPLOSION-PROOF – DIMENSIONS & WEIGHTS

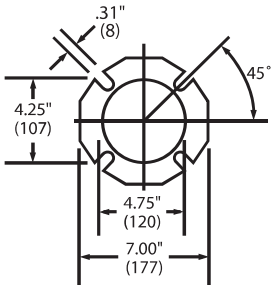

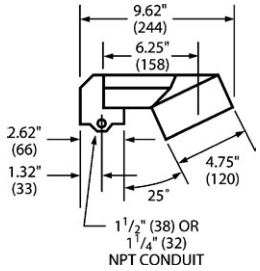

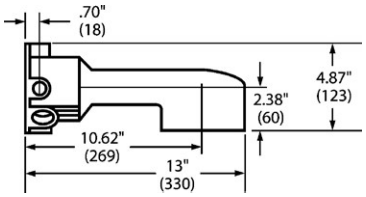

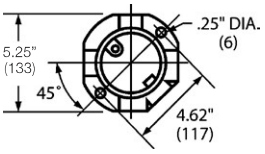

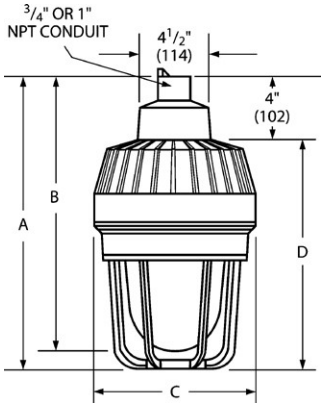

Pendant

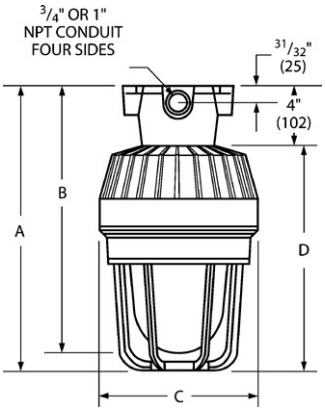

Ceiling

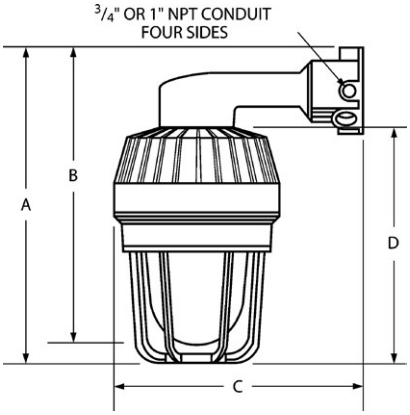

Wall

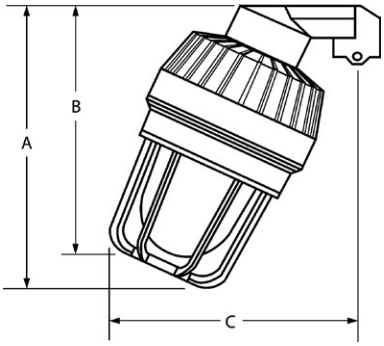

25° Stanchion

EML(C) DIMENSIONS				
TYPE	A	B	C	D
PENDANT	15-15/16" (404)	15-1/16" (382)	8-13/16" (224)	11-15/16" (303)
CEILING	15-15/16" (404)	15-1/16" (382)	8-13/16" (224)	11-15/16" (303)
WALL	16-13/16" (426)	15-15/16" (404)	15" (379)	11-15/16" (303)
STANCHION	15-1/8" (384)	14" (356)	13-1/2" (343)	